B.E.G. LUXOMATIC®



L11

94448 EAN: 4007529944484

230V round light fixture with two E27 sockets (max. 23W each) and an acrylic cover, without a built-in sensor, designed to complement the HF-L11, IP40.

Order data

Designation	Colour	Art.No
L11	white	94448

Technical data

Voltage:	230 V AC ±10% 50 / 60 Hz
Dimensions:	Ø 375 x 125 mm
Lamp:	max. 2 x 23 W with bulb socket E 27
Photobiological safety:	RG 0
Degree / class of protection:	IP40 / Class I
Impact strength:	IK02
Ambient temperature:	-15 °C to +30 °C
Housing:	acrylic glass
Material color:	white

Product information

Round wall and ceiling light

Ideally supplements the HF-L11

Supply without lamp

Application examples:
corridors, halls, staircases, storage rooms, cellars, toilets

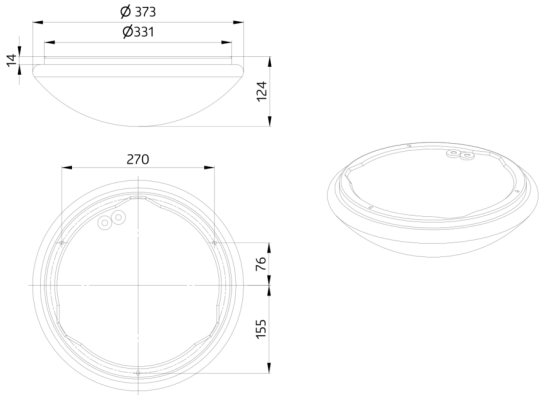

h (m)	Ø (m)	E (lx)
1.0	3.9	317
2.0	7.9	79
3.0	11.8	35
4.0	15.7	20
5.0	19.6	13

