B.E.G. LUXOMATIC®



L1

94453 EAN: 4007529944538

230V round light fixture with E27 socket (max. 23W) and satin-finish glass cover, without built-in sensor, designed to complement the HF-L1, IP40.

Order data

Designation	Colour	Art.No
L1	white	94453

Accessories

Designation	Colour	Art.No
Sealing ring IP54 HF-L1	-	37849

Technical data

Voltage:	230 V AC ±10% 50 / 60 Hz
Dimensions:	Ø 275 x 85 mm
Lamp:	max. 23 W with bulb socket E 27
Photobiological safety:	RG 0
Degree / class of protection:	IP40 / Class II
Ambient temperature:	-15 °C to +30 °C
Housing:	silk-mat glass
Material color:	white

Product information

Round wall and ceiling light

Ideally supplements the HF-L1

Supply without lamp

Application examples:
corridors, halls, staircases, storage rooms, cellars, toilets

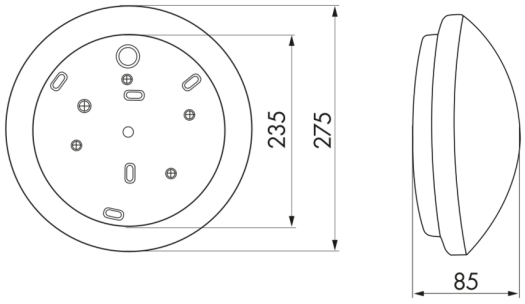

h (m)	Ø (m)	E (lx)
1.0	3.6	57
2.0	7.2	14
3.0	10.8	6
4.0	14.4	4
5.0	18.1	2

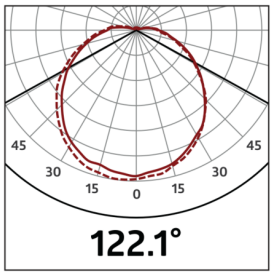

Accessories

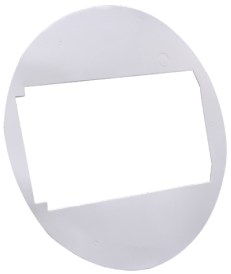

Sealing ring IP54 HF-L1
Art.No: 37849

Dimensions: Ø 230 mm
Degree / class of protection: IP54
Material color: -