B.E.G. LUXOMAT®



Indoor180N-M-1C

93262 EAN: 4007529932627

230V PIR wall-mounted motion detector with 180° detection angle and a range of up to 14 m (300 m²), featuring anti-creep protection and an acoustic sensor

Order data

Designation	Colour	Art.No
Indoor180N-M-1C	traffic white	93262

Accessories

Designation	Colour	Art.No
BLE-IR-Adapter	black	93067

Technical data

Voltage:	230 V AC 10% 50 / 60 Hz
Dimensions:	55 x 55 x 55 mm
Power consumption:	approx. 0.2 W
Detection area:	horizontal 180° (Wall mounting)
Range:	max. 14 m across max. 3 m towards
Monitored area (tangential movement):	300 m² / 1.1 m mounting height
Mounting height min./max./recommended:	1 m / 4 m / 1.1 m
Degree / class of protection:	IP20 / Class II
Impact strength:	IK05
Ambient temperature:	5 °C to +50 °C
Housing:	polycarbonate, UV-resistant
Material color:	traffic white glossy, similar to RAL9016
Channel 1 (lighting control)	
Switching power:	2300 W, cos φ = 1 1150 VA, cos φ = 0.5 800 W LED max. inrush current Ip (20 ms) = 165 A
Type of contact (k):	1x µ-contact, NO contact
Follow-up time:	10 sec – 30 min, Pulse
Switch-on threshold:	10 – 2500 Lux

Product information

Wall occupancy detector with acoustic sensor

Relay version with three-wire technology

Acoustic sensor independently adjustable

Noise automatically extends follow-up time

Manual switching via push-button possible

Available without frame for combination with cover frame (inner cover dimensions 55 x 55 mm)

Factory settings 10 min and 500 lux

Application examples: monitoring of public lavatories, corridors, archive rooms, conference rooms

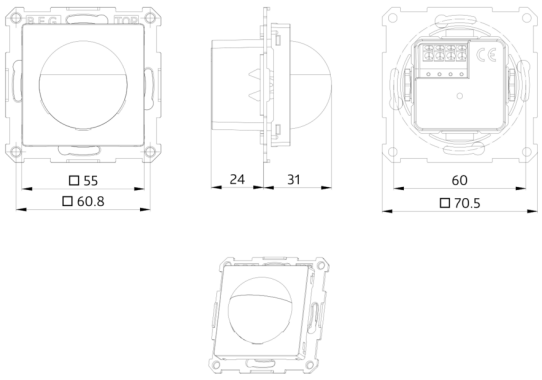
□ 55
□ 60.8
24
31
60
□ 70.5

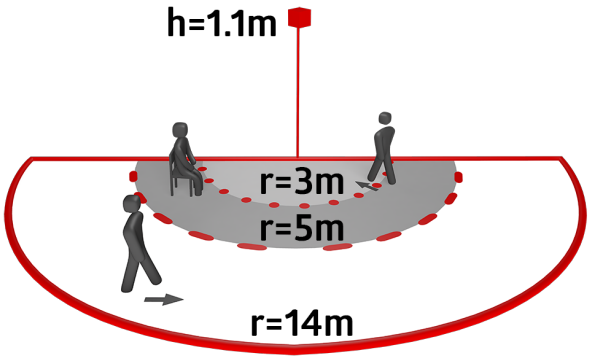
h=1.1m
r=3m
r=5m
r=14m

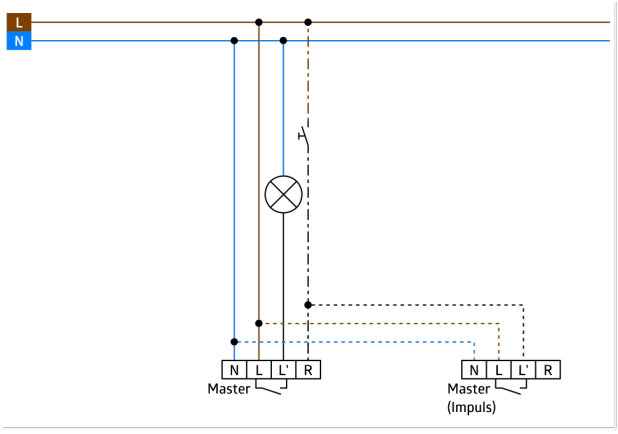
L
N
N L L' R
Master
N L L' R
Master
(Impuls)

Accessories



BLE-IR-Adapter
Art.No: 93067

Dimensions: 40 x 55 x 103 mm
Material color: black
Frequency: 2.4 GHz ISM band, GFSK 0.2 dBm + 5.3 dBi = 5.5 dBm