B.E.G. LUXOMAT®



Indoor 180-S covering included Set 92135-92632

Slave PIR wall-mounted motion detector with 180° coverage and a range of up to 10 m (150 m²), for expanding the detection zone

Order data

Designation	Colour	Art.No
Indoor 180-S covering included	pure white	92135
Frame IP20 Indoor 180	oyster white	92632

Technical data

Voltage:	110 – 240 V AC 50 / 60 Hz
Dimensions:	covering included 87 x 87 x 61 mm
Power consumption:	approx. 0.2 W
Detection area:	horizontal 180° (Wall mounting)
Range:	max. 10 m across max. 3 m towards
Monitored area (tangential movement):	150 m² / 1.1 m mounting height
Mounting height min./max./recommended:	1 m / 2.2 m / 1.1 m
Degree / class of protection:	IP20 / Class II
Impact strength:	IK05
Ambient temperature:	-25 °C to +50 °C
Housing:	polycarbonate, UV-resistant
Material color:	**oyster white mat, similar to RAL1013 (92632)**
Pulse interval:	2 or 9 sec

Product information

Set : Indoor 180-S covering included + Frame IP20 Indoor 180 oyster white mat, similar to RAL1013

Slave device

For extending the detection area of a Master device

Compatible with 230 V devices. Concerning exceptions please see the respective master device.

Available with covering (centre plate dimensions 60 x 60 mm) or without covering for use with covering (centre plate dimensions 50 x 50 mm) in 5 different colours

In combination with centre plates usable with current frame systems of various manufacturers

B.E.G. frames and centre plates for combination with other frame systems available

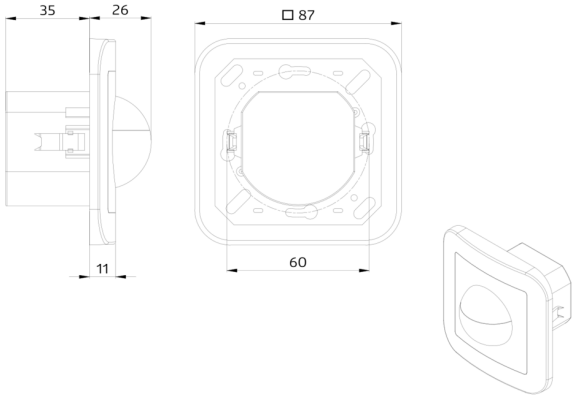
35
26
□ 87
11
60

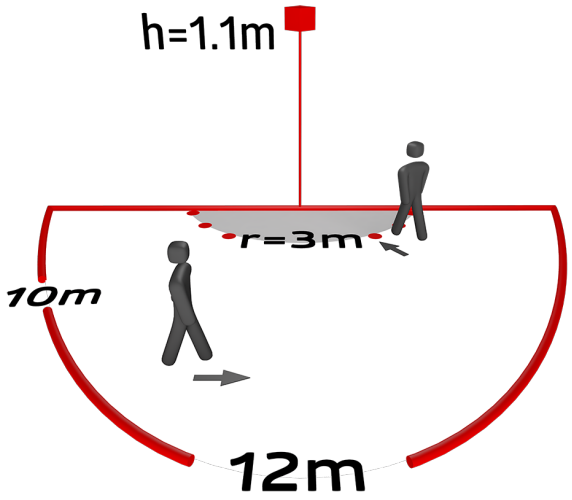
h=1.1m
r=3m
10m
12m

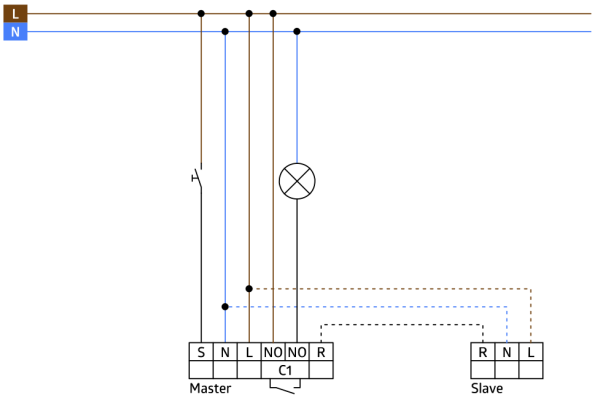
L
N
S
N
L
NO
NO
R
C1
Master
R
N
L
Slave

Set items

To receive the bundle according to the technical specification, please order the items listed.



Indoor 180-S covering included
Art.No: 92135

Voltage: 110 – 240 V AC 50 / 60 Hz
Dimensions: covering included 87 x 87 x 61 mm
Power consumption: approx. 0.2 W



Frame IP20 Indoor 180
Art.No: 92632

Dimensions: 86 x 86 mm
Degree / class of protection: IP20
Housing: polycarbonate, UV-resistant