B.E.G. LUXOMAT®



Indoor 180-R covering included

92623 EAN: 4007529926237

230V PIR wall-mounted motion detector with 180° detection angle and a range of up to 10 meters (150 m²), with an acoustic sensor

Order data

Designation	Colour	Art.No
Indoor 180-R covering included	pure white	92623

Areas of application

- entrance halls
- corridors/hallways
- staircases
- toilets
- equipment rooms

Accessories

Designation	Colour	Art.No
Frame IP20 Indoor 180	pure white	92630
Frame IP20 Indoor 180	traffic white	92631
Frame IP20 Indoor 180	anthracite	92634
Frame IP54 Indoor 180	pure white	92139
Frame IP20 Indoor 180	oyster white	92632
Frame IP20 Indoor 180	silver	92633
Surface mounting socket Indoor 180	pure white	92141
Central plate Indoor 180 45x45	traffic white	38947
Central plate Indoor 180 45x45	oyster white	39076
Central plate Indoor 180 55 x 55 mm	pure white	39222
Central plate Indoor 180 55 x 55 mm	traffic white	39223
Central plate Indoor 180 55 x 55 mm	signal white	39241

Central plate Indoor 180 55x55	traffic white	39242
Central plate Indoor 180 S1 56x56	pure white	35126
Central plate Indoor 180 56x56 modular2	pure white	35127
Blinds Indoor 180 transparent		92294
Blind Indoor 180		33233
protective cap Indoor 180		92018

Technical data

Voltage:	110 – 240 V AC 50 / 60 Hz
Dimensions:	covering included 87 x 87 x 61 mm
Power consumption:	approx. 0.5 W
Detection area:	horizontal 180° (Wall mounting)
Range:	max. 10 m across max. 3 m towards
Monitored area (tangential movement):	150 m² / 1.1 m mounting height
Mounting height min./max./recommended:	1 m / 2.2 m / 1.1 m
Degree / class of protection:	IP20 / Class II
Impact strength:	IK05
Ambient temperature:	-25 °C to +50 °C
Housing:	polycarbonate, UV-resistant
Material color:	pure white mat, similar to RAL9010
Channel 1 (lighting control)	
Switching power:	2300 W, cos φ = 1 1150 VA, cos φ = 0.5 800 W LED max. inrush current Ip (20 ms) = 165 A max. inrush current Ip (200 µs) = 800 A
Type of contact (k):	1x µ-contact, NO contact with tungsten pre-make contact
Follow-up time:	15 sec – 16 min, Pulse
Switch-on threshold:	10 – 2000 Lux

Product information

Wall motion detector with acoustic sensor

Relay version with three-wire technology

Acoustic sensor independently adjustable

Noise automatically extends follow-up time

Manual switching via push-button possible

Available with covering (centre plate dimensions 60 x 60 mm) or without covering for use with covering (centre plate dimensions 50 x 50 mm) in 5 different colours

In combination with centre plates usable with current frame systems of various manufacturers

B.E.G. frames and centre plates for combination with other frame systems available

Application examples:
entrance halls, corridors/hallways, staircases, toilets, equipment rooms

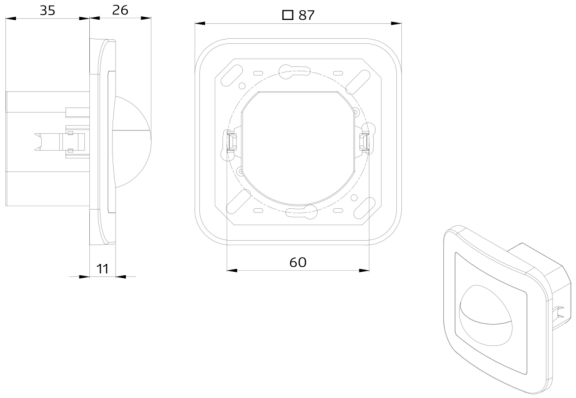
35
26
□ 87
11
60

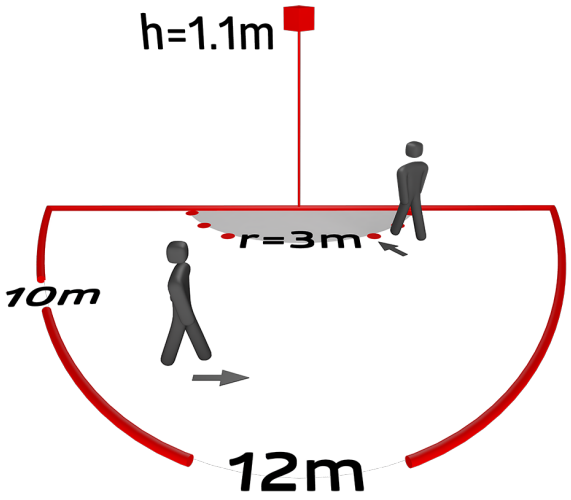
h=1.1m
r=3m
10m
12m

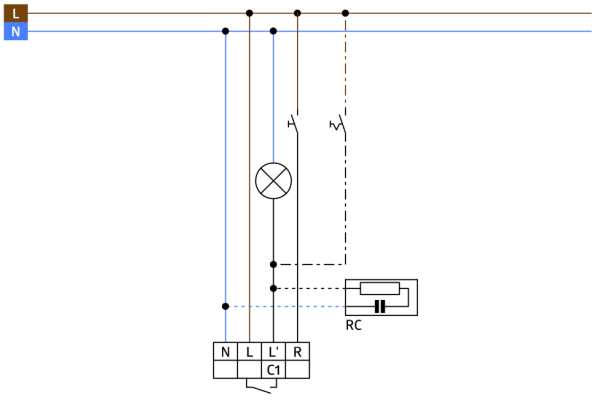
L
N
RC
N
L
L'
R
C1

Accessories



Frame IP20 Indoor 180
Art.No: 92630

Dimensions: 86 x 86 mm
Degree / class of protection: IP20
Housing: polycarbonate, UV-resistant



Frame IP20 Indoor 180
Art.No: 92631

Dimensions: 86 x 86 mm
Degree / class of protection: IP20
Housing: polycarbonate, UV-resistant



Frame IP20 Indoor 180
Art.No: 92634

Dimensions: 86 x 86 mm
Degree / class of protection: IP20
Housing: polycarbonate, UV-resistant



Frame IP54 Indoor 180
Art.No: 92139

Dimensions: 87 x 87 mm
Degree / class of protection: IP54
Housing: polycarbonate, UV-resistant



Frame IP20 Indoor 180
Art.No: 92632

Dimensions: 86 x 86 mm
Degree / class of protection: IP20
Housing: polycarbonate, UV-resistant



Frame IP20 Indoor 180
Art.No: 92633

Dimensions: 86 x 86 mm
Degree / class of protection: IP20
Housing: polycarbonate, UV-resistant



Surface mounting socket Indoor 180
Art.No: 92141

Dimensions: 88 x 88 x 42 mm
Degree / class of protection: IP54
Impact strength: IK05



Central plate Indoor 180 45x45
Art.No: 38947

Dimensions: 45 x 45 mm
Material color: traffic white mat, similar to RAL9016



Central plate Indoor 180 45x45
Art.No: 39076

Dimensions: 45 x 45 mm
Housing: polycarbonate, UV-resistant
Material color: oyster white mat, similar to RAL1013

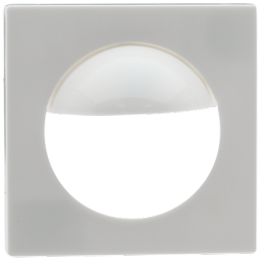

Central plate Indoor 180 55 x 55 mm
Art.No: 39222

Dimensions: 55 x 55 mm
Housing: polycarbonate, UV-resistant
Material color: pure white glossy, similar to RAL9010



Central plate Indoor 180 55 x 55 mm
Art.No: 39223

Dimensions: 55 x 55 mm
Housing: polycarbonate, UV-resistant
Material color: traffic white glossy



Central plate Indoor 180 55 x 55 mm
Art.No: 39241

Dimensions: 55 x 55 mm
Housing: polycarbonate, UV-resistant
Material color: signal white glossy, similar to RAL9003



Central plate Indoor 180 55x55
Art.No: 39242

Dimensions: 55 x 55 mm
Housing: polycarbonate, UV-resistant
Material color: traffic white glossy, similar to RAL9016



Central plate Indoor 180 S1 56x56
Art.No: 35126

Dimensions: 56 x 56 mm
Housing: polycarbonate, UV-resistant
Material color: pure white glossy, similar to RAL9010



Central plate Indoor 180 56x56 modular2
Art.No: 35127

Dimensions: 56 x 56 mm
Housing: polycarbonate, UV-resistant
Material color: pure white glossy, similar to RAL9010



Blinds Indoor 180 transparent
Art.No: 92294

Housing: polycarbonate, UV-resistant

Blind Indoor 180
Art.No: 33233

Housing: polycarbonate, UV-resistant
Material color: white



protective cap Indoor 180
Art.No: 92018

Dimensions: 56 x 56 mm
Housing: polycarbonate, UV-resistant
Material color: pure white glossy, similar to RAL9010