B.E.G. LUXOMAT®



Indoor 180-M-2C covering included Set 92136-92634-92141

230V 2-channel PIR wall-mounted motion detector with 180° detection angle and a range of up to 10 m (150 m²), with acoustic sensor

Order data

Designation	Colour	Art.No
Indoor 180-M-2C covering included	pure white	92136
Frame IP20 Indoor 180	anthracite	92634
Surface mounting socket Indoor 180	pure white	92141

Areas of application

- corridors/hallways
- toilets
- entrance halls
- staircases
- equipment rooms

Technical data

Voltage:	110 – 240 V AC 50 / 60 Hz
Dimensions:	**88 x 88 x 42 mm (92141)**
Power consumption:	approx. 0.4 W
Detection area:	horizontal 180° (Wall mounting)
Range:	max. 10 m across max. 3 m towards
Monitored area (tangential movement):	150 m² / 1.1 m mounting height
Mounting height min./max./recommended:	1 m / 2.2 m / 1.1 m
Degree / class of protection:	**IP54 (92141)**
Impact strength:	IK05
Ambient temperature:	-25 °C to +50 °C
Housing:	polycarbonate, UV-resistant
Material color:	**anthracite mat, similar to RAL7021 (92634)**
Channel 1 (lighting control)	
Switching power:	2300 W, cos φ = 1 1150 VA, cos φ = 0.5 800 W LED max. inrush current Ip (20 ms) = 165 A max. inrush current Ip (200 µs) = 800 A
Type of contact (k):	1x µ-contact, NO contact with tungsten pre-make contact
Follow-up time:	15 sec – 30 min, Pulse
Switch-on threshold:	10 – 2000 Lux
Channel 2 (HVAC control potential-free (dry))	
Switching power:	3 A (230 V), cos φ = 1
Type of contact:	1x µ-contact, dry NO contact
Follow-up time:	5 min – 120 min, Alarm pulse, Pulse

Product information

Set : Indoor 180-M-2C covering included + Frame IP20 Indoor 180 anthracite mat, similar to RAL7021 + Surface mounting socket Indoor 180 pure white mat, similar to RAL9010

Wall occupancy detector with acoustic sensor

One channel for light switching

One additional potential-free (dry) contact for HVAC

Version as master device

Detection area can be extended by using slave devices

Acoustic sensor independently adjustable

Noise automatically extends follow-up time

Available with covering (centre plate dimensions 60 x 60 mm) or without covering for use with covering (centre plate dimensions 50 x 50 mm) in 5 different colours

In combination with centre plates usable with current frame systems of various manufacturers

B.E.G. frames and centre plates for combination with other frame systems available

Factory settings 10 min and 500 lux (15 min HVAC)

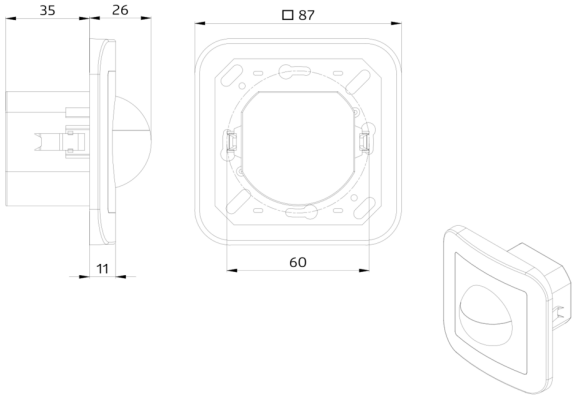
35
26
□ 87
11
60

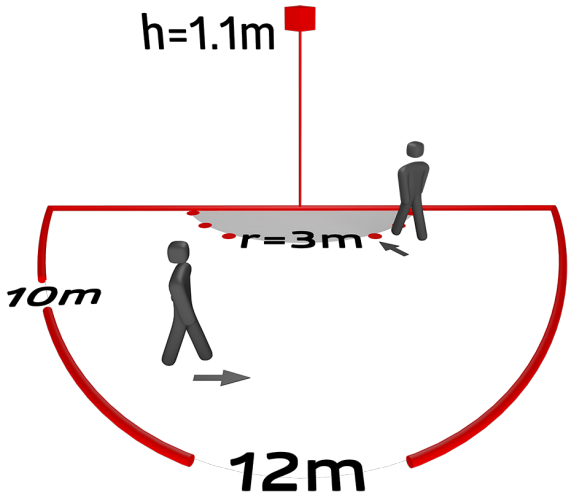
h=1.1m
r=3m
10m
12m

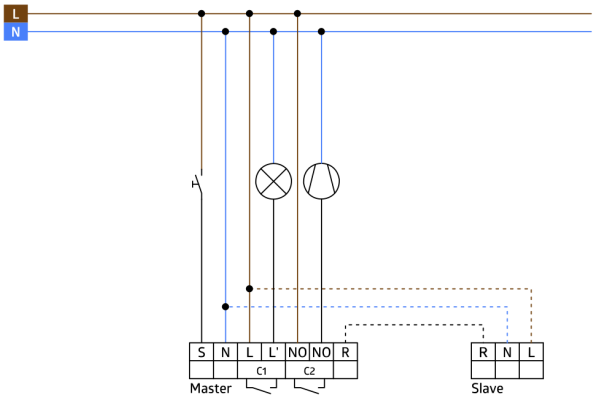
L
N
S
N
L
L'
NO
NO
R
C1
C2
Master
R
N
L
Slave

Set items

To receive the bundle according to the technical specification, please order the items listed.



Indoor 180-M-2C covering included
Art.No: 92136

Voltage: 110 – 240 V AC 50 / 60 Hz
Dimensions: covering included 87 x 87 x 61 mm
Power consumption: approx. 0.4 W



Frame IP20 Indoor 180
Art.No: 92634

Dimensions: 86 x 86 mm
Degree / class of protection: IP20
Housing: polycarbonate, UV-resistant



Surface mounting socket Indoor 180
Art.No: 92141

Dimensions: 88 x 88 x 42 mm
Degree / class of protection: IP54
Impact strength: IK05