B.E.G. LUXOMAT® net



# Indoor 180-KNXs-DX covering not included Set 93525-92634

KNX PIR Wall-Mounted Motion Sensor (Deluxe) with 180° detection and a range of up to 10 m (150 m²)

## Order data

| Designation | Colour | Art.No |
|---|---|---|
| Indoor 180-KNXs-DX covering not included | - | 93525 |
| Frame IP20 Indoor 180 | anthracite | 92634 |

## Technical data

| | |
|---|---|
| Voltage: | via KNX BUS |
| Dimensions: | (covering not included) 70 x 70 x 61 mm |
| Typ. power input: | 12 mA |
| Detection area: | horizontal 180° (Wall mounting) |
| Range: | max. 10 m across<br>max. 3 m towards |
| Monitored area (tangential movement): | 150 m² / 1.1 m mounting height |
| Mounting height min./max./recommended: | 1 m / 2.2 m / 1.1 m |
| Degree / class of protection: | IP20 / Class III |
| Impact strength: | IK05 |
| Ambient temperature: | -25 °C to +55 °C |
| Temperature measurement range: | -5 °C to +45 °C |
| Housing: | polycarbonate, UV-resistant |
| Material color: | **anthracite mat, similar to RAL7021 (92634)** |
| Number of light sensors: | 1 |
| Number of PIR sensors: | 1 |
| KNX TP 256: | Yes |
| KNX Secure: | Yes |
| Orientation light: | 5 – 100 % / OFF / 1 min – 255 min |
| Night light: | 5 – 100 % |
| Brightness set value: | 5 – 2000 Lux |

## Product information

Set : Indoor 180-KNXs-DX covering not included + Frame IP20 Indoor 180 anthracite mat, similar to RAL7021

KNX occupancy detector with integrated KNX bus coupler, especially for installation in walls

KNX Secure ready

HCL/RGB control

Parameterisation from ETS 5 for integration into KNX systems

Individual adaption of the PIR sensor sensitivity

Mixed light measurement using internal and remote (optional) light sensors

Intelligent semi-automatic mode, occupancy-independent regulating mode (photoelectric switch), full automatic mode

1 x Light (for regulating or switching), 1 x slave output, 3 separate HVAC-blocs

Regulation of up to three lighting groups using offset (external influence possible)

Short presence, self-adjusting follow-up time, corridor function

Various locking functions

Soft-start

Two logic modules

Recall of light scenes

Deactivatable status indicators

Temperature- and noise sensor

The product database for import into the ETS database can be downloaded from the B.E.G. homepage.

Detection area can be extended thanks to master-slave-mode

Extensive optimization options for light measurement

Measured light value is communicated to the bus

Adaption of dimming curve

Bidirectionally remote control-capable with the IR adapter and the B.E.G. smartphone app

PIN code

IR remote control-capable via IR remote control (optionally)

5 button remote control, programmable at choice (accessory)

Programming button (phys. address) can be operated via remote control

HVAC mode (0=automatic, 1=comfort, 2=stand-by, 3=economy, 4=antifreeze/heat protection)

Manual influence via external KNX push buttons possible

Function control (heartbeat, cyclical sending)

Occupancy simulation

Forced switch-off

Intelligent central-off function

Premonition of switch-off

Burn-in function for fluorescent lamps selectable from 1h till 100h

Behaviour upon bus voltage return definable at choice

Variable safety pause after switching off the lights

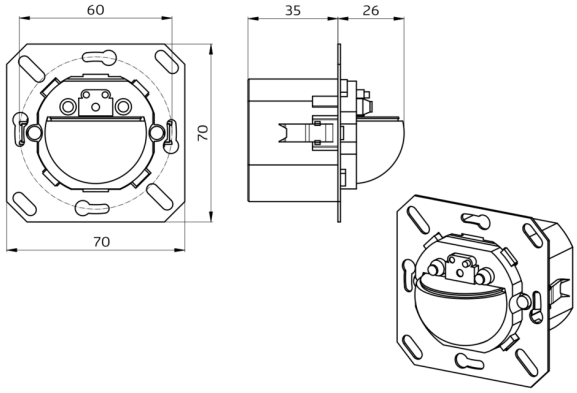
60
35
26
70
70

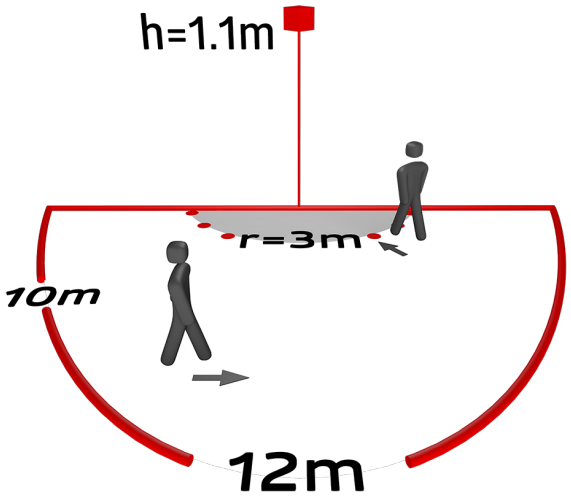
h=1.1m
r=3m
10m
12m

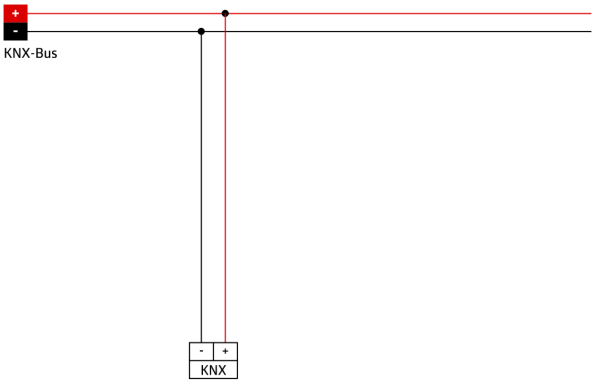
+
-
KNX-Bus
-
+
KNX

## Set items

To receive the bundle according to the technical specification, please order the items listed.



**Indoor 180-KNXs-DX covering not included**
Art.No: 93525

Voltage: via KNX BUS
Dimensions: (covering not included) 70 x 70 x 61 mm
Typ. power input: 12 mA



**Frame IP20 Indoor 180**
Art.No: 92634

Dimensions: 86 x 86 mm
Degree / class of protection: IP20
Housing: polycarbonate, UV-resistant