B.E.G. LUXOMAT®




# IR-PDim

92200 EAN: 4007529922000

Infrared remote control for conveniently setting or changing parameters

Comes complete with a wall bracket

The functions of the remote control are described with the respective device

## Order data

| Designation | Colour | Art.No |
|---|---|---|
| IR-PDim | - | 92200 |

## Accessories

| Designation | Colour | Art.No |
|---|---|---|
| Wall holder IR-RC | white | 92100 |

## Technical data

| | |
|---|---|
| Battery: | 3.0 V Lithium CR2032 (inclusive) |
| Dimensions: | 80 x 60 x 8 mm |
| Material color: | - |
| Transmit range: | **clouded/dark:** max. 5 to 6 m<br>**sunshine:** max. 2 to 3 m |

## Product information

Infrared remote control for conveniently setting or changing parameters

Comes complete with a wall bracket

Easy programming of the occupancy detectors PD1N-M-DIM, PD2-M-DIM, PD4-M-DIM, PD4-M-DIM-HKL, PD4-M-DUO-DIM, PD5-M-DIM und PD9-M-DIM

The functions of the remote control are described with the respective device

Suitable for: 92153, 92218, 92248, 92272, 92310, ...

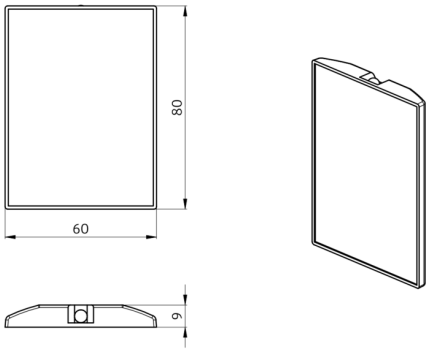
80
60
9

## Accessories



**Wall holder IR-RC**
Art.No: 92100

Dimensions: 63 x 30 x 19 mm
Housing: polycarbonate, UV-resistant
Material color: white