IR-PD-DIM-Mini

92098 EAN: 4007529920983



Mini remote control for end user

Mobile switch for switching the light on and off

Ring for attachment with your keys included

Order data

Designation	Colour	Art.No
IR-PD-DIM-Mini	-	92098

Accessories

Designation	Colour	Art.No
Wall holder IR-RC	white	92100

Technical data

Battery:	3.0 V Lithium CR2032 (inclusive)
Dimensions:	57 x 35 x 7 mm
Material color:	-
Transmit range:	**clouded/dark:** max. 5 to 6 m **sunshine:** max. 2 to 3 m

Product information

Mini remote control for end user

Mobile switch for switching the light on and off

Ring for attachment with your keys included

Easy programming of the Master versions of following occupancy detectors:
PD1N-M-DIM
PD2-M-DIM
PD4-M-DIM
PD4-M-DIM-HKL
PD4-M-DUO-DIM
PD5-M-DIM
PD9-M-DIM

The functions of the remote control are described with the respective device

Suitable for: 92153, 92218, 92248, 92272, 92310, 92973, ...

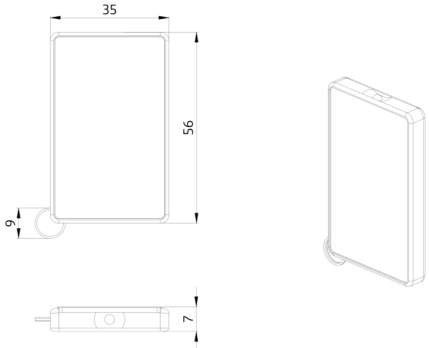
35
56
9
7

Accessories



Wall holder IR-RC
Art.No: 92100

Dimensions: 63 x 30 x 19 mm
Housing: polycarbonate, UV-resistant
Material color: white