B.E.G. LUXOMAT®



IR-HCL2-Mini

93374 EAN: 4007529933747

Mini remote control for end user

Activates 4 pre-programmed scenes and a dynamic HCL curve

Ring for attachment with your keys included

Order data

Designation	Colour	Art.No
IR-HCL2-Mini	-	93374

Accessories

Designation	Colour	Art.No
Wall holder IR-RC	white	92100

Technical data

Battery:	3.0 V Lithium CR2032 (inclusive)
Dimensions:	57 x 35 x 7 mm
Material color:	-
Transmit range:	**clouded/dark:** max. 5 to 6 m **sunshine:** max. 2 to 3 m

Product information

Mini remote control for end user

Activates 4 pre-programmed scenes and a dynamic HCL curve

Ring for attachment with your keys included

For usability/compatibility of the accessories please refer to the descriptions of the main articles

The functions of the remote control are described with the respective device

Suitable for: 93484, 93485, ...

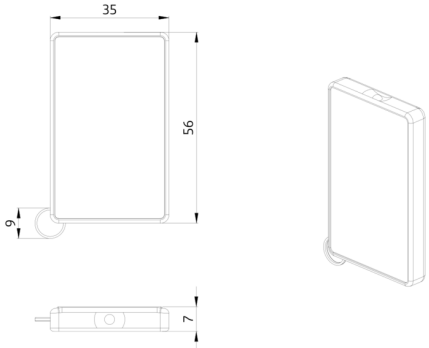
35
56
9
7

Accessories



Wall holder IR-RC
Art.No: 92100

Dimensions: 63 x 30 x 19 mm
Housing: polycarbonate, UV-resistant
Material color: white