B.E.G. LUXOMAT®



HF-MD2-SM

94402 EAN: 4007529944026

230V high-frequency motion detector with 360° coverage and a range of up to Ø16m (200 m²)

Order data

Designation	Colour	Art.No
HF-MD2-SM	white	94402

Areas of application

- toilets
- equipment rooms

Accessories

Designation	Colour	Art.No
Wire basket BSK (Ø 200 x 90 mm)	white	92199
RC-Arc extinction kit	white	10880
Mini-RC-Arc extinction kit		10882
Pendulum mounting set PD2/3/4 SM	white	93179
Pendulum mounting set PD2/3/4 SM	jet black	93193

Technical data

Voltage:	230 V AC +/- 10% 50 / 60 Hz
Dimensions:	Ø 117 x 45 mm
Power consumption:	approx. 1.2 W
Detection area:	horizontal 360° (Ceiling mounting) Ø 0.4 – 16 m
Monitored area (tangential movement):	200 m² / 2.5 m mounting height
Mounting height min./max./recommended:	1 m / 4 m / 2.5 m
Degree / class of protection:	IP20 / Class II
Ambient temperature:	-15 °C to +50 °C
Housing:	polycarbonate, UV-resistant
Material color:	white mat, similar to RAL9010
Channel 1 (lighting control)	
Switching power:	1200 W, cos φ = 1 800 W LED max. inrush current Ip (20 ms) = 120 A
Type of contact (k):	1x µ-contact, NO contact
Follow-up time:	5 sec – 15 min
Switch-on threshold:	2 – 2000 Lux
Radar / HF technology:	5.8 GHz, < 10 mW

Product information

Microwave motion detector, designed for surface mount

Temperature-independent detection

Detection can be made through various materials

Range, switch-on threshold and follow-up time set via potentiometers

Application examples:
toilets, equipment rooms

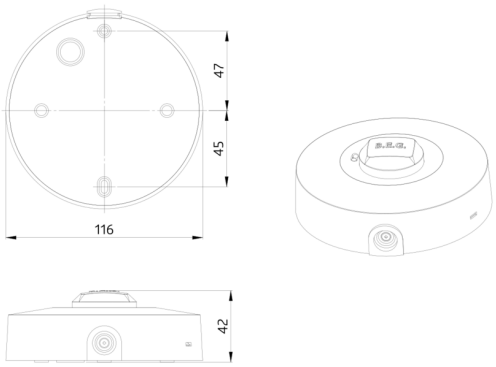
47
45
116
42

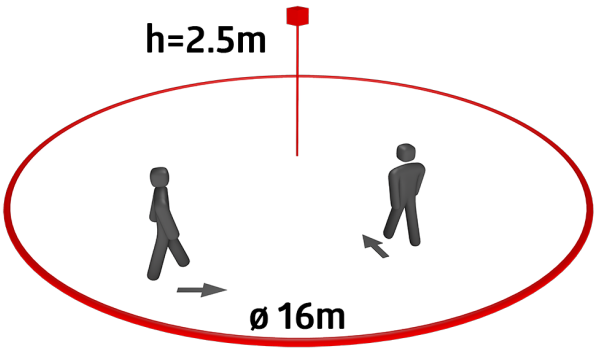
h=2.5m
ø 16m

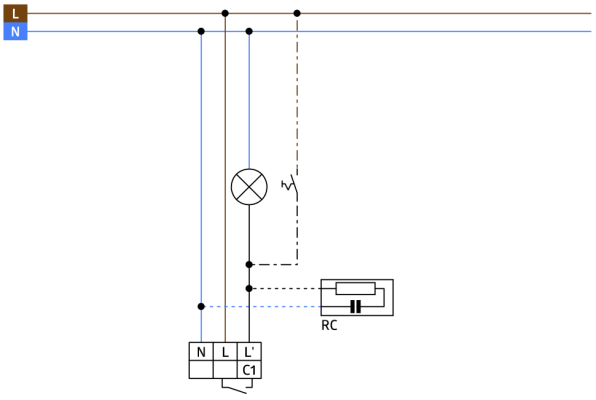
L
N
RC
N
L
L'
C1

Accessories

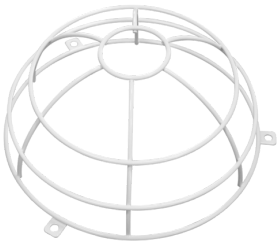

Wire basket BSK (Ø 200 x 90 mm)
Art.No: 92199

Dimensions: Ø 200 x 90 mm
Impact strength: IK09
Housing: coated steel basket



RC-Arc extinction kit
Art.No: 10880

Voltage: 230 V AC ±10%
Dimensions: 38 x 12 x 26 mm
Degree / class of protection: IP20 / Class II



Mini-RC-Arc extinction kit
Art.No: 10882

Voltage: 230 V AC ±10%
Dimensions: 50 x 23 x 8 mm
Degree / class of protection: IP20 / Class II



Pendulum mounting set PD2/3/4 SM
Art.No: 93179

Dimensions: 1 : Ø 113 x 79 mm, 2 : Ø 113 x 34 mm
Housing: polycarbonate, UV-resistant
Material color: white, similar to RAL9010



Pendulum mounting set PD2/3/4 SM
Art.No: 93193

Dimensions: 1 : Ø 113 x 79 mm, 2 : Ø 113 x 34 mm
Housing: polycarbonate, UV-resistant
Material color: jet black, similar to RAL9005