B.E.G. LUXOMATIC®



HF-L7

94450 EAN: 4007529944507

230V round light fixture with E27 socket (max. 23W), built-in 5.8-GHz RF motion sensor with a detection range of up to Ø16m, and impact-resistant polycarbonate cover (IK06), IP40.

Order data

Designation	Colour	Art.No
HF-L7	white	94450

Technical data

Voltage:	230 V AC ±10% 50 / 60 Hz
Dimensions:	Ø 300 x 110 mm
Lamp:	max. 23 W with bulb socket E 27
Photobiological safety:	RG 0
Degree / class of protection:	IP40 / Class I
Impact strength:	94445=IK02, 94450=IK06
Ambient temperature:	-15 °C to +30 °C
Housing:	**HF-L8:** acrylic glass **HF-L7:** Polycarbonate
Material color:	white
Microwave detector	
Radar / HF technology:	5.8 GHz, < 10 mW
Switching power:	1200 W, cos φ = 1 600 VA, cos φ = 0.5
Detection area:	horizontal 360° (Ceiling mounting) Ø 0.4 – 16 m
Follow-up time:	15 sec – 15 min
Switch-on threshold:	2 – 2000 Lux

Product information

Wall and ceiling light with integrated microwave detector

HF technology: 5.8 GHz - reacts to the smallest motion, independently of temperature

Extremely short response time

Range, switch-on threshold and follow-up time set via potentiometers

Possibility to connect other lights which are also controlled by the one microwave detector

Supply without lamp

Application examples:
corridors, halls, staircases, storage rooms, cellars, toilets

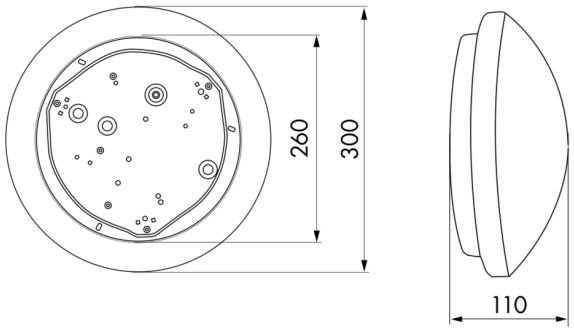

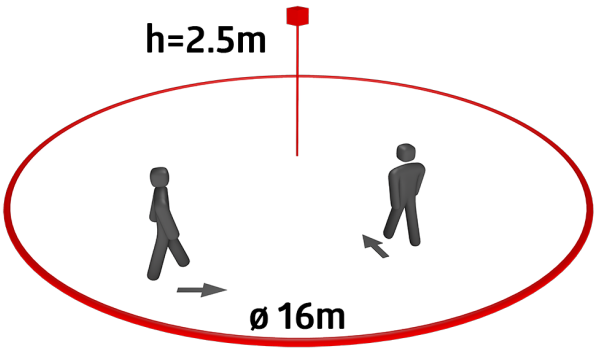

h (m)	Ø (m)	E (lx)
1.0	3.7	27
2.0	7.4	7
3.0	11.0	3
4.0	14.7	2
5.0	18.4	1

