

HF-L1

94440 EAN: 4007529944408

230V round light fixture with E27 socket (max. 23W) and built-in 5.8-GHz RF motion sensor, 360° detection range up to Ø16m, adjustable delay time, IP40.

Order data

Designation	Colour	Art.No
HF-L1	white	94440

Accessories

Designation	Colour	Art.No
Sealing ring IP54 HF-L1	-	37849

Technical data

Voltage:	230 V AC ±10% 50 / 60 Hz
Dimensions:	Ø 275 x 85 mm
Lamp:	max. 23 W with bulb socket E 27
Photobiological safety:	RG 0
Degree / class of protection:	IP40 / Class II
Ambient temperature:	-15 °C to +30 °C
Housing:	silk-mat glass
Material color:	white
Microwave detector	
Radar / HF technology:	5.8 GHz, < 10 mW
Switching power:	1200 W, cos φ = 1 600 VA, cos φ = 0.5
Detection area:	horizontal 360° (Ceiling mounting) Ø 0.4 – 16 m
Follow-up time:	5 sec – 15 min
Switch-on threshold:	2 – 2000 Lux

Product information

Wall and ceiling light with integrated microwave detector

Range, switch-on threshold and follow-up time set via potentiometers

HF technology: 5.8 GHz - reacts to the smallest motion, independently of temperature

Extremely short response time

Possibility to connect other lights which are also controlled by the one microwave detector

Supply without lamp

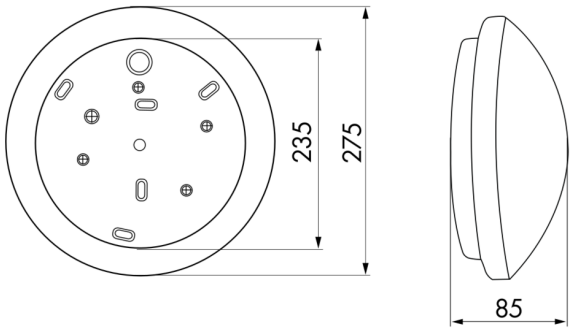

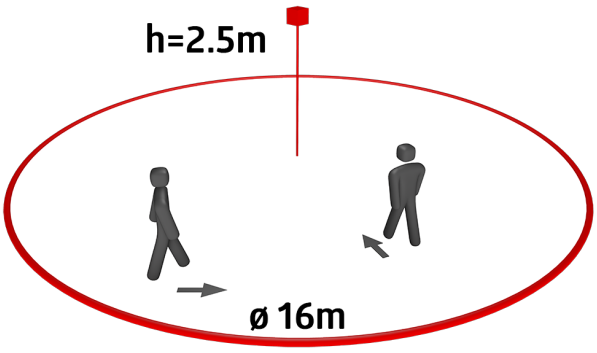

h (m)	Ø (m)	E (lx)
1.0	3.6	57
2.0	7.2	14
3.0	10.8	6
4.0	14.4	4
5.0	18.1	2

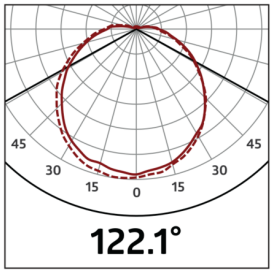

Accessories

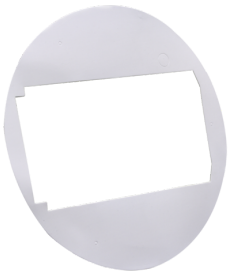

Sealing ring IP54 HF-L1
Art.No: 37849

Dimensions: Ø 230 mm
Degree / class of protection: IP54
Material color: -