B.E.G. LUXOMAT®



HF-H-MD1 Standard

94431 EAN: 4007529944316

Microwave motion detector, designed for surface mount and installation in lights

Temperature-independent detection

Detection can be made through various materials

Order data

Designation	Colour	Art.No
HF-H-MD1 Standard	white	94431

Areas of application

- toilets
- equipment rooms

Technical data

Voltage:	230 V AC +/- 10% 50 Hz
Dimensions:	103 x 53 x 26 mm
Power consumption:	approx. 0.8 W
Detection area:	horizontal 360° (Ceiling mounting) Ø 0.2 – 16 m
Monitored area (tangential movement):	200 m² / 2.5 m mounting height
Mounting height min./max./recommended:	1 m / 11 m / 2.5 m
Degree / class of protection:	IP20 / Class II
Ambient temperature:	-35 °C to +70 °C
Housing:	polycarbonate, UV-resistant
Material color:	white mat, similar to RAL9010
Channel 1 (lighting control)	
Switching power:	1000 W, cos φ = 1
Type of contact (k):	1x µ-contact, NO contact
Follow-up time:	5 sec – 25 min
Switch-on threshold:	2 – 30 Lux
Radar / HF technology:	5.8 GHz, < 10 mW

Product information

Microwave motion detector, designed for surface mount and installation in lights

Temperature-independent detection

Detection can be made through various materials

Range, switch-on threshold and follow-up time are adjustable with DIP switches

Application examples:
toilets, equipment rooms

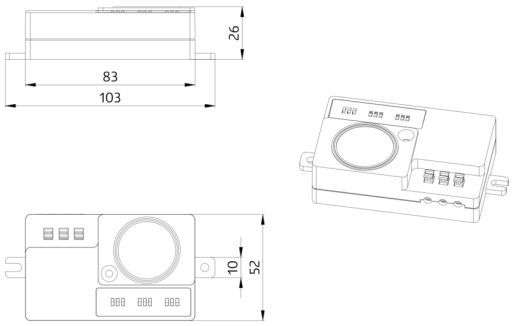
26
83
103
10
52

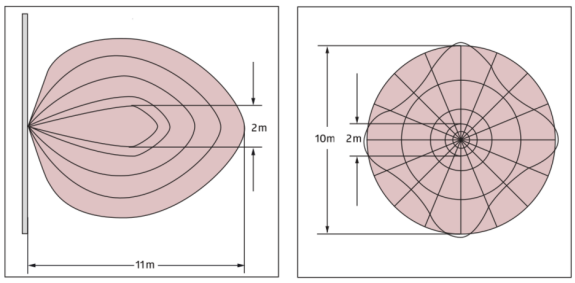
2m
11m
10m
2m

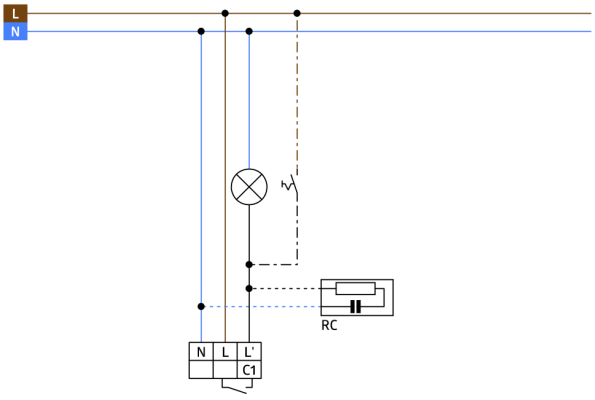
L
N
RC
N
L
L'
C1