B.E.G. LUXOMAT®



Frame LC

91081 EAN: 4007529910816

Enables the mounting of an LC-Click on a standard flush-mounting box

Can be mounted on standard flush-mount boxes

Order data

Designation	Colour	Art.No
Frame LC	black	91081

Technical data

Dimensions:	78 x 78 x 13 mm
Housing:	polycarbonate, UV-resistant
Material color:	black

Product information

Enables the mounting of an LC-Click on a standard flush-mounting box

Can be mounted on standard flush-mount boxes

Suitable for: 91101, 91102, 91121, 91122, ...

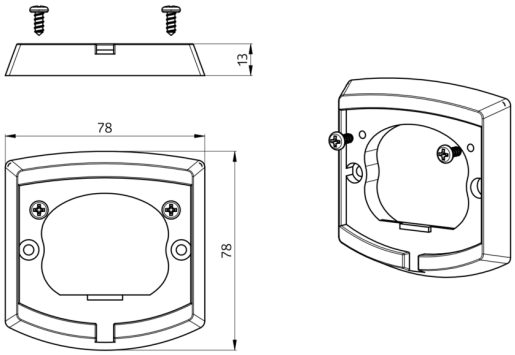
13
78
78