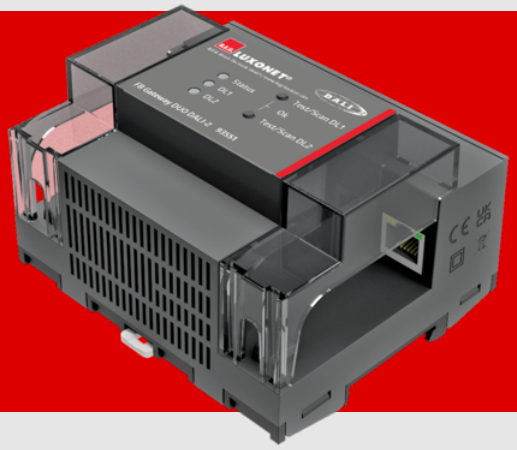

FB Gateway DUO DALI-2

93551 EAN: 4007529935512

Virtual, pre-programmable Ethernet/DALI gateway with an integrated Ethernet switch and 2 DALI lines for energy-efficient, time-saving, flexible, scalable, and secure building automation with LUXONET® from B.E.G.

Order data

Designation	Colour	Art.No
FB Gateway DUO DALI-2	anthracite	93551

Technical data

Voltage:	24 – 48 V DC
Dimensions:	90 x 108 x 64 mm (6 TE)
Output voltage:	16 V DC (DALI, typical)
Power consumption:	max. 14 W
Degree / class of protection:	IP20 / Class II
Ambient temperature:	0 °C to +45 °C
Housing:	Polyamide, UV-resistant
Material color:	anthracite
Connections and wires:	2 x Ethernet/LAN 2 x DALI
Nominal current:	225 mA (per channel)
Nominal current (max.):	250 mA (per channel)

Product information

Virtually pre-programmable Ethernet/DALI gateway for energy-efficient, time-saving, flexible, scalable and secure building automation with LUXONET® from B.E.G.

A fieldbus gateway within the LUXONET® building automation system from B.E.G. is connected to the fieldbus controller via a local Ethernet network and, in addition to acting as a link to the fieldbus level, also functions as a playback device for local, script-based automation – but only for those automations that control the device's own output groups. On the one hand, this simplifies the scalability of the entire system by automatically providing additional CPU and memory resources as the number of field devices and automations increases. On the other hand, this creates greater operational reliability by avoiding a single point of failure (SPoF) in the automation level. Fieldbus gateways are always connected to any building management systems via the fieldbus controller in the same Ethernet network. Enables flexible DALI lighting control and emergency lighting management with additional products.2 DALI interfaces.Designed as a multi-master device, networkable.

No additional DALI application controllers must or may be connected to the DALI line

2 integrated DALI bus power supplies (each guaranteed 225mA)

No additional DALI bus power supplies must or may be connected to the DALI line

DALI-2 certified product

DALI-2 control gear from any manufacturer and DALI-2 input devices from B.E.G. can be used at no extra cost. DALI-2 input devices from any manufacturer can be used at an additional cost.

Automatic addressing and basic configuration of DALI devices at system start-up

Auto-healing function after DALI device replacement

Status LED indicators

High-quality fan with automatic switch-on and switch-off

Fully virtual planning and configuration with graphical user interface

Turnkey automation scripts for typical areas of application (e.g. office, corridor, gym, classroom, high-bay warehouse, folding door rooms, and much more)

Quick linking of digital twins on the construction site with floor plan view on tablet

Easy installation and device replacement processes (e.g. luminaire replacement) designed for in-house technicians or local electricians

Easy installation check of all connected DALI participants via two buttons accessible from the front

Extended, detailed installation check of all field devices with QR code scan on the fieldbus controller.

Flexible connection to building management systems via integrated API secure with additional products possible.

Series-mounted device with daisy chain housing concept and transparent side caps.

2 Ethernet connections.

Integrated strain relief for Ethernet connections

Integrated Ethernet switch

Fully encrypted MQTT communication (MQTTS) based on BSI recommendations

Multi-factor authentication for cloud-based project planning software

Applications and functions:

Manual switching and dimming of lights via conventional push buttons possible

Presence-dependent lighting control, daylight-dependent lighting control and time-based automation adjustable

Semi-automatic, fully automatic, lighting control or presence mode adjustable

Single, offset and multi-instance control can be set

Fade-in, cross-fade and fade-out can be set

Colour temperature – Tunable White – static or dynamic, can be set depending on time

Situations and sequences can be set

Automation time window – for example, for day and night operation – adjustable

Orientation light adjustable

Guided Light – swarm function – adjustable

Folding door function – e.g. for 3-field sports hall or double conference room – adjustable

Presence-dependent HVAC control via DALI relay adjustable

Central eco mode – centrally triggered, temporary limitation of the maximum light value of all or certain luminaires – adjustable

Any logical functions can be provided at short notice by B.E.G.

Dependencies:

Planning and commissioning can only be carried out by B.E.G. itself or by LUXONET®-certified partners (system integrators or electricians).

Up to 128 DALI-2 control gear units per device (64 per DALI

line).

Up to 32 DALI-2 input sensors per device (16 per DALI line)

Up to 32 DALI-2 input buttons per device (16 per DALI line)

Up to 24 room or zone automations with control per device (12 per DALI line)

Local Ethernet network with specific requirements necessary

The local Ethernet network is not necessary for simple installation testing via control buttons on fieldbus gateways

The local Ethernet network must be connected to the Internet for installation monitoring, commissioning, maintenance, remote maintenance and software updates

An internet connection is not essential for regular operation after commissioning.

Scope of delivery information:

Cable ties for strain relief device included in scope of delivery.

One Ethernet patch cable included in scope of delivery.

Labelled double plug for DC power supply, also suitable for through-wiring, included in delivery /

Labelled plugs for DALI included in delivery

Other

This item is a component of a building automation system from B.E.G.

Additional system components (hardware) from B.E.G. are required

Additional software from B.E.G. is required

Additional services (planning, commissioning and, if necessary, maintenance) from B.E.G. or certified system integrators are required

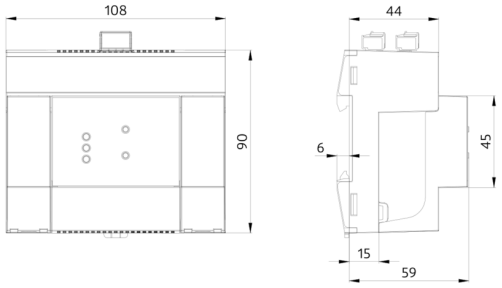
108
90
44
45
6
15
59

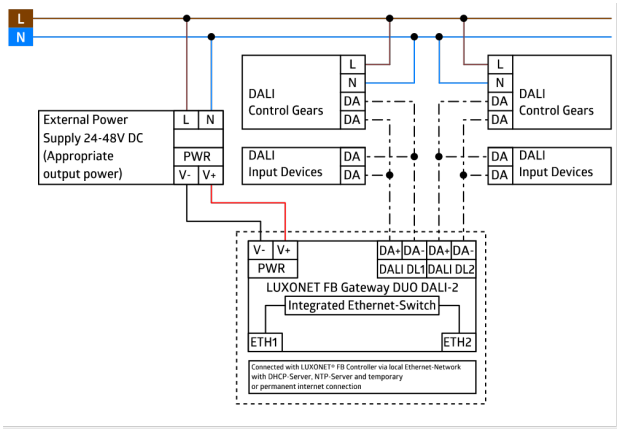
L
N
External Power
Supply 24-48V DC
(Appropriate
output power)
L
N
PWR
V-
V+
DALI
Control Gears
L
N
DA
DA
DALI
Input Devices
DA
DA
L
N
DA
DA
DALI
Control Gears
DA
DA
DALI
Input Devices
V-
V+
PWR
DA+
DA-
DA+
DA-
DALI DL1
DALI DL2
LUXONET FB Gateway DUO DALI-2
Integrated Ethernet-Switch
ETH1
ETH2
Connected with LUXONET® FB Controller via local Ethernet-Network
with DHCP-Server, NTP-Server and temporary
or permanent internet connection