B.E.G. LUXOMAT® net



DA64-230/KNX REG DALI-2

93338 EAN: 4007529933389

DALI-2-certified KNX-DALI gateway for DIN rail mounting, designed to control up to 64 DALI luminaires in 16 groups; supports switching and dimming. Supports DALI-LINK sensors and devices.

Order data

Designation	Colour	Art.No
DA64-230/KNX REG DALI-2	-	93338

Technical data

Voltage:	230 V AC -15/+10% 50 / 60 Hz
Dimensions:	90 x 72 x 64 mm (4 TE)
Typ. power input:	5 mA (KNX, typical)
Output voltage:	16 V DC (DALI, typical)
Power consumption:	0.9 – 6 W
Degree / class of protection:	IP20 / Class II
Ambient temperature:	-5 °C to +45 °C
Housing:	PA66
Material color:	-
KNX TP 256:	Yes
Connections and wires:	KNX bus terminal black/red
Nominal current:	160 mA
Nominal current (max.):	250 mA

Product information

KNX DALI gateway for controlling DALI lights

DALI-2 certified product

Each gateway is for controlling and dimming up to 64 electronic ballasts in 16 groups

Scenes module for controlling individual electronic ballasts

Support for RGB, Tunable White and Human Centric Lighting (DT8)

Support of B.E.G. DALI-LINK multisensors, push-button modules, push-buttons and DALI relay modules

Commissioning via DCA

Quick replacement of luminaires possible via DCA

Broadcast command with flashing function for simple commissioning of the lights via built-in operating buttons

Support for DALI emergency luminaires (DT1) with comprehensive diagnostic and test functions, suitable for connection to building management systems

Compatible with most DALI drivers or DALI ballasts

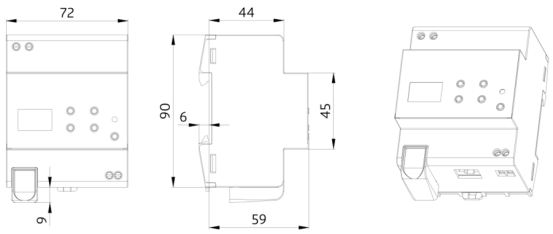
72
44
90
6
45
59
9

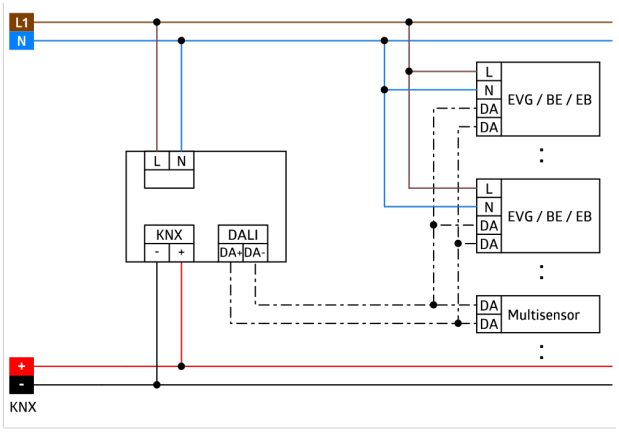
L1
N
L
N
EVG / BE / EB
DA
DA
L
N
KNX
DALI
-
+
DA+
DA-
L
N
EVG / BE / EB
DA
DA
DA
DA
Multisensor
+
-
KNX