B.E.G. LUXOMAT®

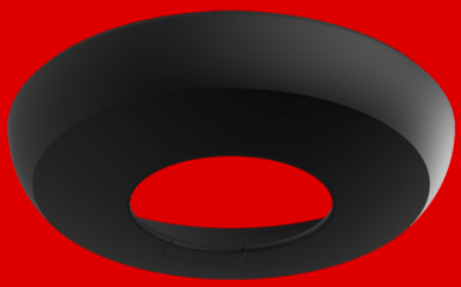

Cover ring PD3N FM

93087 EAN: 4007529930876

Cover ring for colour matching

For usability/compatibility of the accessories please refer to the descriptions of the main articles

Order data

Designation	Colour	Art.No
Cover ring PD3N FM	jet black	93087

Technical data

Dimensions:	Ø 106 x 17 mm
Housing:	polycarbonate, UV-resistant
Material color:	jet black mat, similar to RAL9005

Product information

Cover ring for colour matching

For usability/compatibility of the accessories please refer to the descriptions of the main articles

Suitable for: 92186, 92188, ...

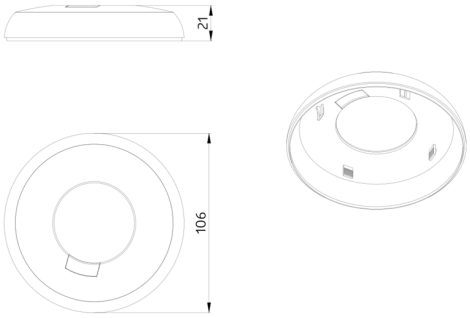
21
106