B.E.G. LUXOMAT®

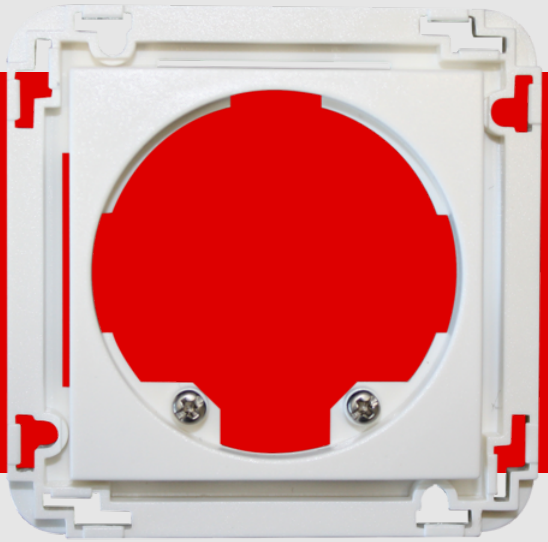

Central plate Indoor 140 45x45

38946 EAN: 4007529389469

Central plate for automatic wall switch Indoor 140-L

For combination with a sensor insert

Please order the sensor insert for the wall switch separately

Order data

Designation	Colour	Art.No
Central plate Indoor 140 45x45	pure white	38946

Technical data

Dimensions:	45 x 45 mm
Degree / class of protection:	IP20 / Class II
Material color:	pure white glossy, similar to RAL9010

Product information

Central plate for automatic wall switch Indoor 140-L

For combination with a sensor insert

Please order the sensor insert for the wall switch separately

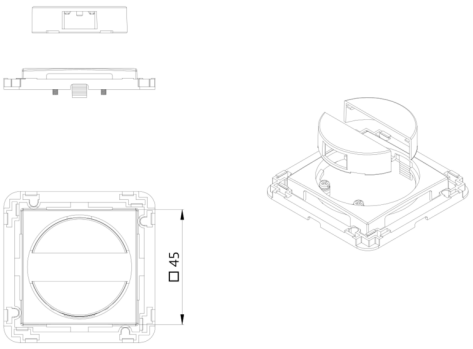
□45