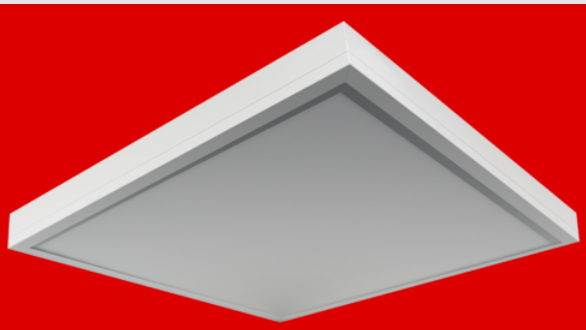

Ceiling-mounted frame PL1-LED Modul 625

93181 EAN: 4007529931811

Aluminium white for module 625

For free combination with PL1 panel luminaires

Order data

Designation	Colour	Art.No
Ceiling-mounted frame PL1-LED Modul 625	white	93181

Technical data

Dimensions:	632 x 632 x 60 mm
Housing:	Aluminium
Material color:	white

Product information

Aluminium white for module 625

For free combination with PL1 panel luminaires

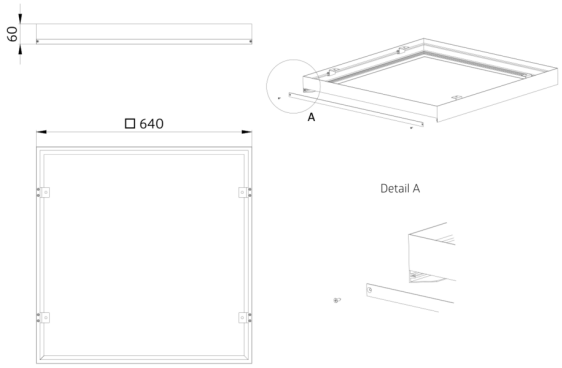
60
□ 640
A
Detail A