B.E.G. LUXOMAT®



CdS-T-SM

92367 EAN: 4007529923670

230V twilight switch for surface mounting with built-in timer and programmable energy-saving period

Order data

Designation	Colour	Art.No
CdS-T-SM	white	92367

Accessories

Designation	Colour	Art.No
BLE-IR-Adapter	black	93067
IR-CdS-T	-	92368

Technical data

Voltage:	110 – 240 V AC 50 / 60 Hz
Dimensions:	69 x 63 x 55 mm
Power consumption:	< 0.5 W
Degree / class of protection:	IP54 / Class II
Ambient temperature:	-25 °C to +50 °C
Housing:	polycarbonate, UV-resistant
Material color:	white mat, similar to RAL9010
Channel 1 (lighting control)	
Switching power:	2300 W, cos φ = 1 1150 VA, cos φ = 0.5 max. inrush current Ip (20 ms) = 165 A max. inrush current Ip (200 µs) = 800 A
Type of contact (k):	1x NO contact with tungsten pre-make contact
Switch-on threshold:	2 – 300 Lux

Product information

Remote control-capable photo electric switch with integrated timer

Energy-saving period may be programmed with the integrated timer by the touch of a button

Inputting the current light value by the touch of a button

Infrared remote control included

Relay with tungsten pre-make contact, optimised for LED loads

Application examples: ideal for entrance areas, staircases, halls where permanent light is required

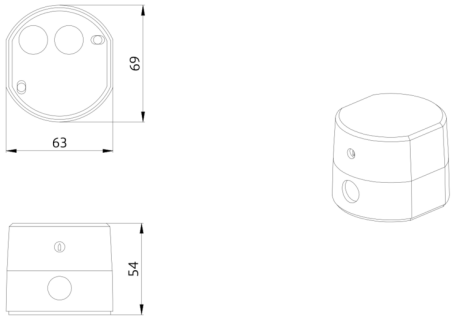
69
63
54

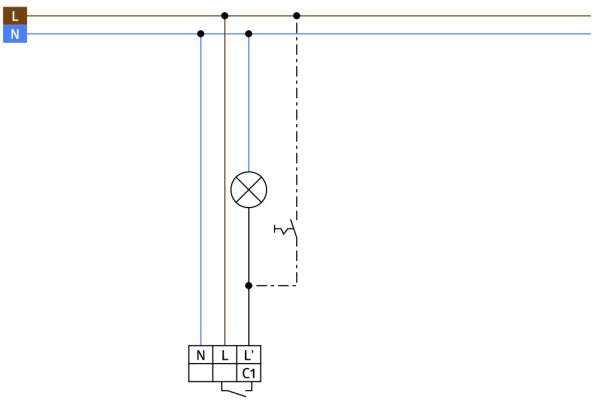
L
N
N
L
L'
C1

Accessories



BLE-IR-Adapter
Art.No: 93067

Dimensions: 40 x 55 x 103 mm
Material color: black
Frequency: 2.4 GHz ISM band, GFSK 0.2 dBm + 5.3 dBi = 5.5 dBm

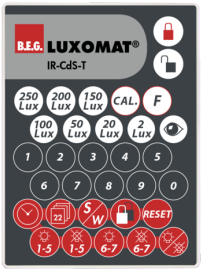

IR-CdS-T
Art.No: 92368

Battery: 3.0 V Lithium CR2032 (inclusive)
Dimensions: 80 x 60 x 8 mm
Material color: -