B.E.G. LUXOMAT®



CdS-SM

92369 EAN: 4007529923694

230V twilight switch for wall and pole mounting

Order data

Designation	Colour	Art.No
CdS-SM	white	92369

Technical data

Voltage:	110 – 240 V AC 50 / 60 Hz
Dimensions:	42 x 80 x 96 mm
Power consumption:	< 0.5 W
Degree / class of protection:	IP54 / Class II
Impact strength:	IK01
Ambient temperature:	-25 °C to +50 °C
Housing:	polycarbonate, UV-resistant
Material color:	white, similar to RAL9010
Channel 1 (lighting control)	
Switching power:	2300 W, cos φ = 1 1150 VA, cos φ = 0.5 300 W LED
Type of contact (k):	1x µ-contact, NO contact
Switch-on and -off delay:	1 s - 120 s
Switch-on threshold:	2 – 1000 Lux

Product information

Photoelectric switch for automatically switching

Activation and deactivation delay with self-learning deactivation-light value

Integrated automatic function (10 Lux / 40 sec. activation / 120 sec. deactivation delay)

LED adjustment aid (without delay) for adjustment of the switch-on threshold

Light value and activation/deactivation delay may be set from the outside using the potentiometer

Double cable inlet from underneath possible

Wall and mast installation

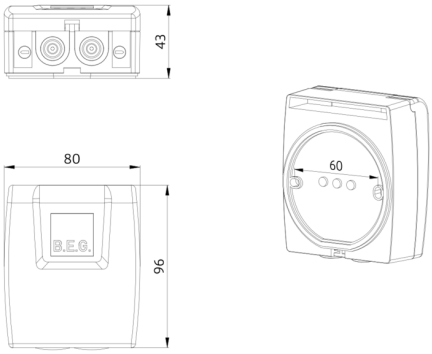
43
80
96
60
B.E.G.

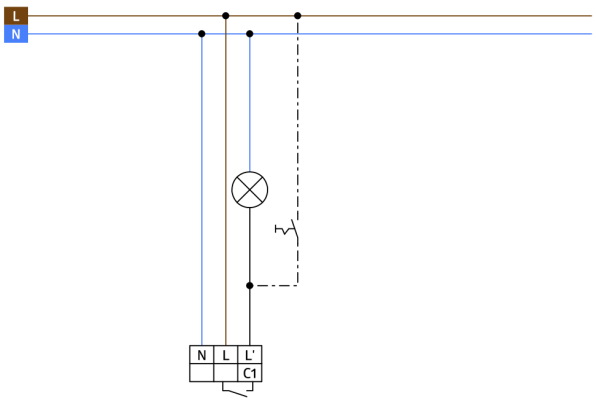
L
N
N
L
L'
C1