B.E.G. LUXOMAT®



CdS-FC

92249 EAN: 4007529922499

230V twilight switch for recessed ceiling installation with an exceptionally slim design

Order data

Designation	Colour	Art.No
CdS-FC	white	92249

Accessories

Designation	Colour	Art.No
BLE-IR-Adapter	black	93067
IR-CdS-FP	-	92396

Technical data

Voltage:	110 – 240 V AC 50 / 60 Hz
Dimensions:	Ø 80 x 74 mm
Power consumption:	< 1 W
Degree / class of protection:	IP20 / Class II
Impact strength:	IK05
Ambient temperature:	-25 °C to +50 °C
Housing:	polycarbonate, UV-resistant
Material color:	white mat, similar to RAL9010
Channel 1 (lighting control)	
Switching power:	2000 W, cos φ = 1 1000 VA, cos φ = 0.5 max. inrush current Ip (20 ms) = 165 A max. inrush current Ip (200 µs) = 800 A
Type of contact (k):	1x µ-contact, NO contact with tungsten pre-make contact
Switch-on delay:	determined automatically
Switch-off delay:	5 s - 30 min
Switch-on threshold:	10 – 2000 Lux
Light measuring:	Mixed light measuring

Product information

Remote control-capable photoelectric switch

Extra flat form – only 6 mm high

Adjustable deactivation delay with selflearning deactivation and twilight value

Application examples: ideal for entrance areas, staircases, offices and training facilities

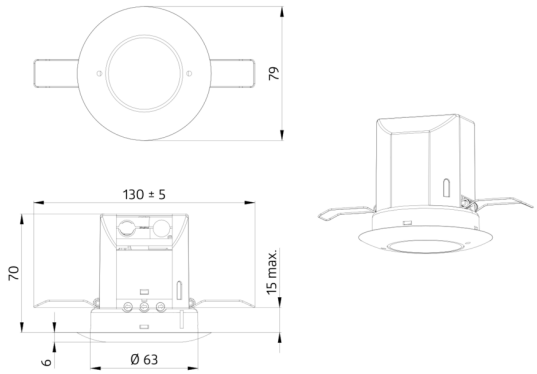
79
130 ± 5
70
15 max.
6
Ø 63

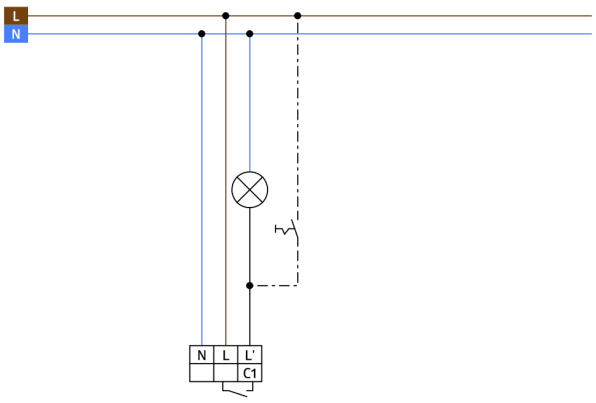
L
N
N
L
L'
C1

Accessories



BLE-IR-Adapter
Art.No: 93067

Dimensions: 40 x 55 x 103 mm
Material color: black
Frequency: 2.4 GHz ISM band, GFSK 0.2 dBm + 5.3 dBi = 5.5 dBm

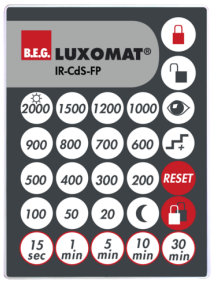

IR-CdS-FP
Art.No: 92396

Battery: 3.0 V Lithium CR2032 (inclusive)
Dimensions: 80 x 60 x 8 mm
Material color: -