B.E.G. LUXOMAT®



CdS-DIM-FC

92589 EAN: 4007529925896

Remote controllable, photo electric switch with ability to dim, for ceiling mounting

Illumination can be dimmed to a desired brightness value.

Actual light value can be read and delay time can be set using the optional infrared remote control

Order data

Designation	Colour	Art.No
CdS-DIM-FC	white	92589

Accessories

Designation	Colour	Art.No
BLE-IR-Adapter	black	93067
IR-CdS	-	92577
Wire basket BSK (Ø 200 x 90 mm)	white	92199

Technical data

Voltage:	110 – 240 V AC 50 / 60 Hz
Dimensions:	Ø 80 x 75 mm
Power consumption:	< 1 W
Degree / class of protection:	IP20 / Class II
Impact strength:	IK05
Ambient temperature:	-25 °C to +50 °C
Housing:	polycarbonate, UV-resistant
Material color:	white mat, similar to RAL9010
Channel 1 (lighting control)	
Switching power:	2300 W, cos φ = 1 1150 VA, cos φ = 0.5 max. inrush current Ip (20 ms) = 165 A max. inrush current Ip (200 µs) = 800 A
Type of contact (k):	1x µ-contact, NO contact with tungsten pre-make contact
DIM output:	1-10 V DC, up to 50 ballasts
Switch-on delay:	determined automatically
Switch-off delay:	1 min - 30 min
Brightness set value:	10 – 2000 Lux

Product information

Remote controllable, photo electric switch with ability to dim, for ceiling mounting

Illumination can be dimmed to a desired brightness value.

Actual light value can be read and delay time can be set using the optional infrared remote control

For connection of up to 50 EB

Constant light regulation

Dynamic switch-on delay

Relay with tungsten pre-make contact, optimised for LED loads

Avoidance of standby losses of the lighting system in accordance with EnEV DIN V 18599-4

Application examples: ideal for entrance areas, staircases, halls where permanent light is required

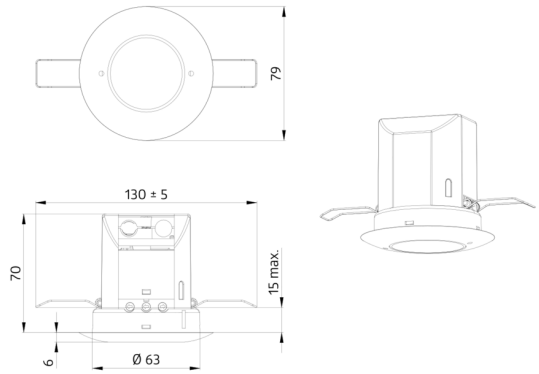
79
130 ± 5
70
15 max.
6
Ø 63

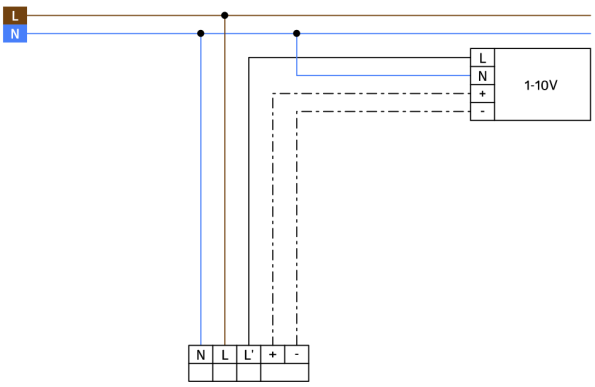
L
N
L
N
+
-
1-10V
N
L
L'
+
-

Accessories



BLE-IR-Adapter
Art.No: 93067

Dimensions: 40 x 55 x 103 mm
Material color: black
Frequency: 2.4 GHz ISM band, GFSK 0.2 dBm + 5.3 dBi = 5.5 dBm

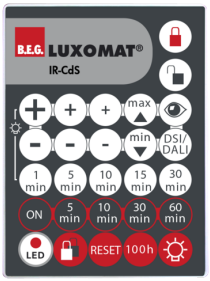

IR-CdS
Art.No: 92577

Battery: 3.0 V Lithium CR2032 (inclusive)
Dimensions: 80 x 60 x 8 mm
Material color: -

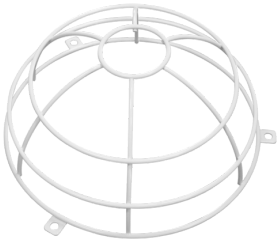

Wire basket BSK (Ø 200 x 90 mm)
Art.No: 92199

Dimensions: Ø 200 x 90 mm
Impact strength: IK09
Housing: coated steel basket