B.E.G. LUXOMAT®



CTS HCL2

93177 EAN: 4007529931774

Colour temperature sensor for surface mounting outdoors

Sends colour temperature values to the DALI bus if required

Powered via DALI bus

Order data

Designation	Colour	Art.No
CTS HCL2	white	93177

Technical data

Voltage:	via DALI Bus, max. 22.5 V DC
Dimensions:	69 x 63 x 55 mm
Typ. power input:	7 mA
Power consumption:	approx. 0.2 W
Degree / class of protection:	IP44 / Class II
Ambient temperature:	-25 °C to +50 °C
Temperature measurement range:	2700K - 6500K (Colour temperature)
Housing:	polycarbonate, UV-resistant
Material color:	white mat, similar to RAL9010
Connections and wires:	0.5 – 1.5 mm² for solid conductors

Product information

Colour temperature sensor for surface mounting outdoors

Sends colour temperature values to the DALI bus if required

Powered via DALI bus

The use of DALI application controllers from other manufacturers is not supported

For usability/compatibility of the accessories please refer to the descriptions of the main articles

Suitable for: 93484, 93485, ...

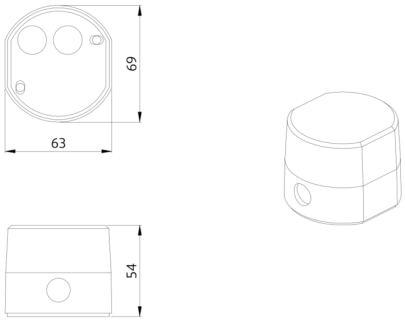
69
63
54

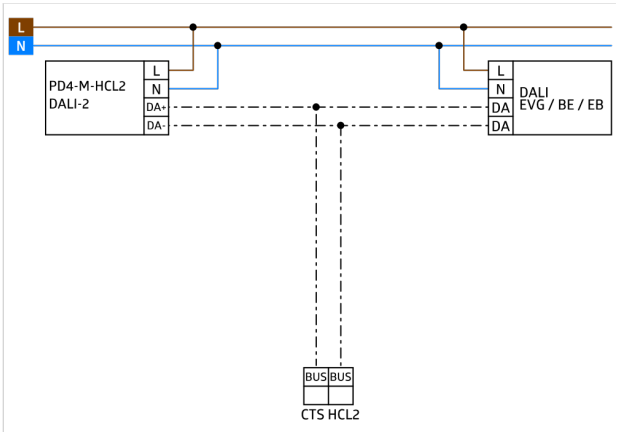
L
N
PD4-M-HCL2
DALI-2
L
N
DA+
DA-
L
N
DA
DA
DALI
EVG / BE / EB
BUS
BUS
CTS HCL2