BLE-IR-Adapter

93067 EAN: 4007529930678



App uses Bluetooth technology

For using the IR adapter, a compatible Android or iOS Smartphone is required.

Charge the Adapter via Micro USB cable

Order data

Designation	Colour	Art.No
BLE-IR-Adapter	black	93067

Technical data

Dimensions:	40 x 55 x 103 mm
Material color:	black
Frequency:	2.4 GHz ISM band, GFSK 0.2 dBm + 5.3 dBi = 5.5 dBm

Product information

BLE-IR-Adapter for Smartphones, for operating all infrared remote control-capable B.E.G. detectors, lights and photoelectric switches

Free B.E.G. App offering a user-friendly navigation for installation on the Smartphone downloadable in the respective App store

App uses Bluetooth technology

For using the IR adapter, a compatible Android or iOS Smartphone is required.

Charge the Adapter via Micro USB cable

The functions of the remote control are described with the respective device

Suitable for: 1215, 91008, 91018, 91028, 91048, 91049, 92119, 92136, 92140, 92142, 92143, 92144, 92148, 92149, 92150, 92151, 92152, 92153, 92154, 92155, 92156, 92158, 92163, 92164, 92165, 92166, 92184, 92186, 92188, 92190, 92196, 92198, 92218, 92219, 92245, 92248, 92249, 92254, 92255, 92270, 92272, 92274, 92279, 92280, 92305, 92306, 92310, 92367, 92440, 92443, 92480, 92485, 92550, 92555, 92565, 92575, 92576, 92580, 92583, 92585, 92586, 92587, 92589, 92591, 92594, 92661, 92709, 92730, 92735, 92740, 92743, 92745, 92746, 92747, 92751, 92756, 92760, 92761, 92900, 92912, 92913, 92923, 92931, 92938, 92973, 93092, 93093, 93159, 93231, 93247, 93260, 93261, 93262, 93263, 93284, 93288, 93317, 93321, 93323, 93324, 93327, 93331, 93333, 93334, 93341, 93343, 93344, 93346, 93404, 93405, 93452, 93453, 93455, 93459, 93460, 93461, 93463, 93469, 93470, 93484, 93485, 93508, 93509, 93510, 93511, 93512, 93513, 93514, 93515, 93516, 93517, 93518, 93520, 93522, 93523, 93524, 93525, 93527, 93528, 93529, 93530, 93531, 93539, 93563, 93580, 94055, ...

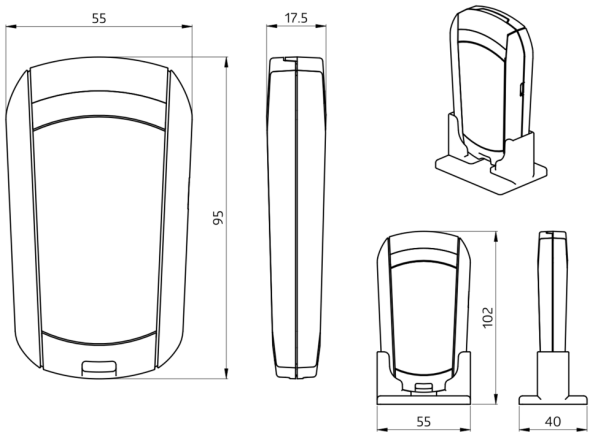
55
17.5
95
102
55
40