BL4-FC Set 93288-93183



230V PIR motion detector with 360° coverage and a range of up to Ø19m (280 m²), remote-controlled

Order data

Designation	Colour	Art.No
BL4-FC	white	93288
Mounting set BL4-SM	white	93183

Areas of application

- entrance halls
- corridors/hallways
- toilets
- equipment rooms
- small offices
- open-plan offices
- conference rooms

Technical data

Voltage:	110 – 240 V AC 50 / 60 Hz
Dimensions:	**Ø 104.5 x 84 mm + Ø 109 x 34 mm (93183)**
Power consumption:	approx. 0.3 W
Detection area:	horizontal 360° (Ceiling mounting)
Range:	max. Ø 19 m across max. Ø 6.4 m towards max. Ø 5 m seated
Monitored area (tangential movement):	280 m² / 2.5 m mounting height
Mounting height min./max./recommended:	2 m / 5 m / 2.5 m
Degree / class of protection:	IP20 / Class II
Impact strength:	**IK04 + IK06 (93183)**
Ambient temperature:	-25 °C to +50 °C
Housing:	polycarbonate, UV-resistant
Material color:	white mat, similar to RAL9010
Connections and wires:	0.5 – 2.5 mm² for solid conductors
Channel 1 (lighting control)	
Switching power:	1000 W, cos φ = 1 500 VA, cos φ = 0.5 400 W LED
Type of contact (k):	1x µ-contact, NO contact
Follow-up time:	15 sec – 60 min
Switch-on threshold:	10 – 2000 Lux

Product information

Set : BL4-FC + Mounting set BL4-SM white

Ceiling motion detector for indoor use with a 360° detection area

For mounting in suspended ceilings

One channel for light switching

Manual switching via push-button possible

Easy operation with remote control (required)

Basic functions for cost-effective applications

Ready-to-operate thanks to factory settings

Accessory for surface mounting and flush mounting available

Factory setting: High detection sensitivity, follow-up time 10 min, switch-on threshold 500 lux

High-performance relay designed for 100,000 switching cycles under high load, several million switching cycles possible under low load

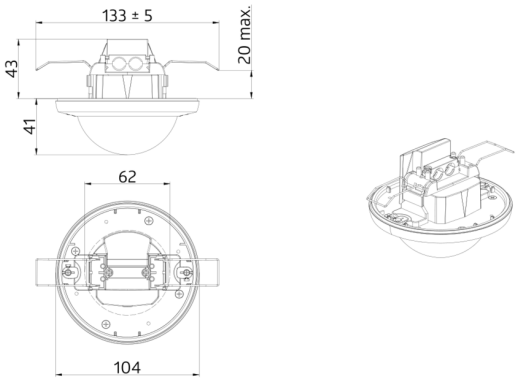
133 ± 5
20 max.
43
41
62
104

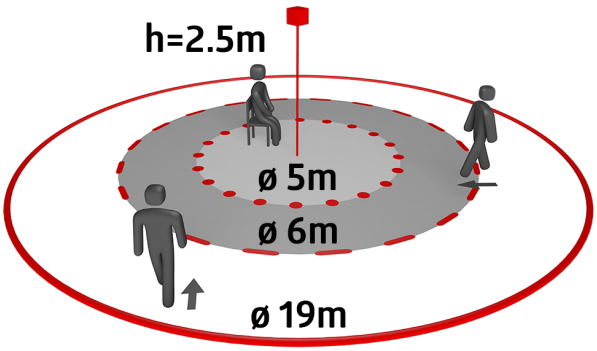
h=2.5m
ø 5m
ø 6m
ø 19m

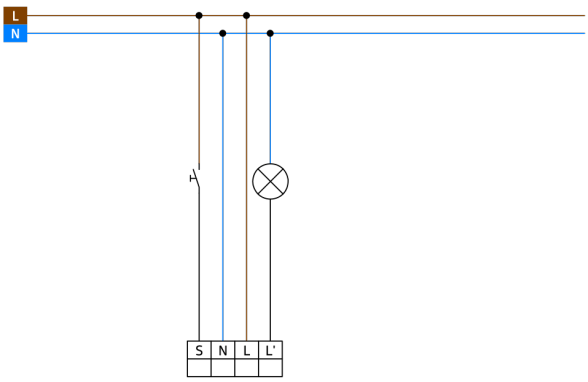
L
N
S
N
L
L'

Set items

To receive the bundle according to the technical specification, please order the items listed.



BL4-FC
Art.No: 93288

Voltage: 110 – 240 V AC 50 / 60 Hz
Dimensions: Ø 104.5 x 84 mm
Power consumption: approx. 0.3 W



Mounting set BL4-SM
Art.No: 93183

Dimensions: Ø 109 x 34 mm
Impact strength: IK06
Material color: white