B.E.G. LUXOMAT®



BL2-PLUS-FC Set
93405-93256

230V PIR motion detector with 360° detection and a range of up to Ø8m (50 m²), remote-controlled

Order data

Designation	Colour	Art.No
BL2-PLUS-FC	white	93405
Mounting set BL2-SM	white	93256

Technical data

Voltage:	110 – 240 V 50 / 60 Hz
Dimensions:	**Ø 80 x 61 mm + Ø 109 x 50 mm (93256)**
Power consumption:	0.3 W
Detection area:	horizontal 360° (Ceiling mounting)
Range:	max. Ø 8 m across max. Ø 4.8 m towards max. Ø 3.2 m seated
Monitored area (tangential movement):	50 m² / 2.5 m mounting height
Mounting height min./max./recommended:	2 m / 5 m / 2.5 m
Degree / class of protection:	IP23 / Class II
Ambient temperature:	-25 °C to +50 °C
Housing:	polycarbonate, UV-resistant
Material color:	white
Connections and wires:	0.5 – 1.5 mm² for solid conductors
Channel 1 (lighting control)	
Switching power:	1000 W, cos φ = 1 500 VA, cos φ = 0.5 400 W LED
Type of contact (k):	1x µ-contact, NO contact
Follow-up time:	15 sec – 30 min
Switch-on threshold:	10 – 2000 Lux

Product information

Set : BL2-PLUS-FC + Mounting set BL2-SM white

Remote control-capable occupancy detector for inside use with circular detection area

For mounting in suspended ceilings

One channel for light switching

Manual switching via push-button possible

Basic functions for cost-effective applications

Ready-to-operate thanks to factory settings

Accessory for surface mounting and flush mounting available

Factory setting: High detection sensitivity, follow-up time 10 min, switch-on threshold 500 lux

Easy operation with remote control (required)

High-performance relay designed for 100,000 switching cycles under high load, several million switching cycles possible under low load

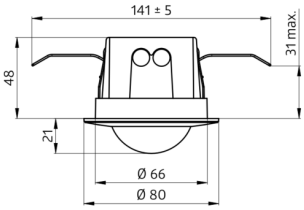
141 ± 5
31 max.
48
21
Ø 66
Ø 80

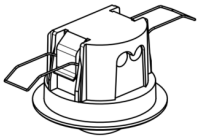

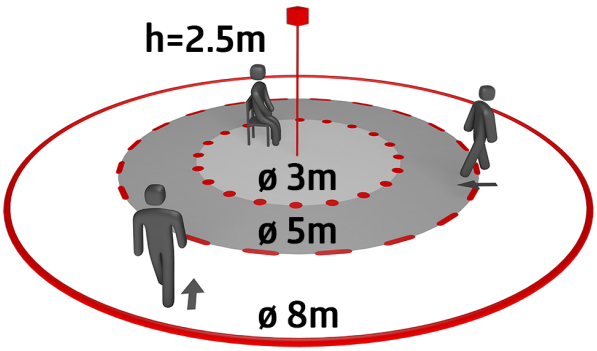
h=2.5m
ø 3m
ø 5m
ø 8m

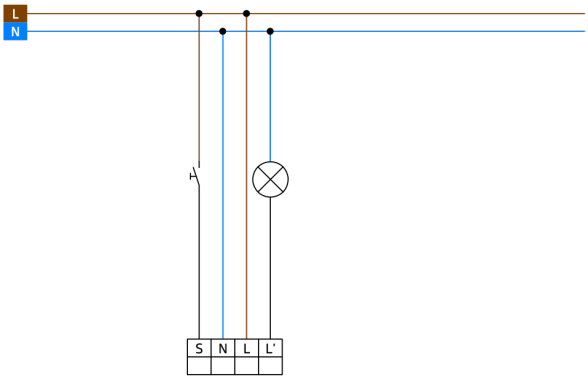
L
N
S
N
L
L'

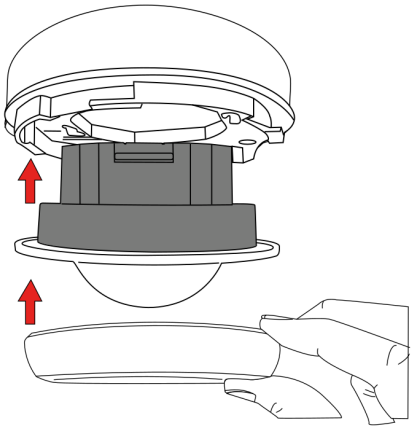

Set items

To receive the bundle according to the technical specification, please order the items listed.



BL2-PLUS-FC
Art.No: 93405

Voltage: 110 – 240 V 50 / 60 Hz
Dimensions: Ø 80 x 61 mm
Power consumption: 0.3 W



Mounting set BL2-SM
Art.No: 93256

Dimensions: Ø 109 x 50 mm
Degree / class of protection: IP23
Material color: white