


# BL2-FC

93317 EAN: 4007529933174

230V PIR motion detector with 360° detection and a range of up to Ø8m (50 m²), remote-controlled

## Order data

| Designation | Colour | Art.No |
|---|---|---|
| BL2-FC | white | 93317 |

## Areas of application

- corridors/hallways
- staircases
- toilets
- equipment rooms

## Accessories

| Designation | Colour | Art.No |
|---|---|---|
| RC-Arc extinction kit | white | 10880 |
| Mini-RC-Arc extinction kit | | 10882 |
| IR-BL | - | 93055 |
| BLE-IR-Adapter | black | 93067 |
| Mounting set BL2-SM | white | 93256 |
| Mounting set BL2-FM | white | 93251 |
| Wire basket BSK (Ø 200 x 90 mm) | white | 92199 |

## Technical data

| | |
|---|---|
| Voltage: | 110 – 240 V |
| Dimensions: | Ø 80 x 63 mm |
| Power consumption: | 0.3 W |
| Detection area: | horizontal 360° (Ceiling mounting) |
| Range: | max. Ø 8 m across<br>max. Ø 4.8 m towards<br>max. Ø 3.2 m seated |
| Monitored area (tangential movement): | 50 m² / 2.5 m mounting height |
| Mounting height min./max./recommended: | 2 m / 5 m / 2.5 m |
| Degree / class of protection: | IP23 / Class II |
| Impact strength: | IK05 |
| Ambient temperature: | -25 °C to +50 °C |
| Housing: | polycarbonate, UV-resistant |
| Material color: | white |
| Connections and wires: | 0.5 – 1.5 mm² for solid conductors |
| **Channel 1 (lighting control)** | |
| Switching power: | 1000 W, cos φ = 1<br>500 VA, cos φ = 0.5<br>400 W LED |
| Type of contact (k): | 1x µ-contact, NO contact |
| Follow-up time: | 15 sec – 60 min |
| Switch-on threshold: | 10 – 2000 Lux |

## Product information

Ceiling motion detector for indoor use with a 360° detection area

For mounting in suspended ceilings

One channel for light switching

Zero crossing switching

**Easy operation with remote control (required)**

Basic functions for cost-effective applications

Ready-to-operate thanks to factory settings

High-performance relay designed for 100,000 switching cycles under high load, several million switching cycles possible under low load

Accessory for surface mounting and flush mounting available

Factory setting: High detection sensitivity, follow-up time 3 min, switch-on threshold 500 lux

**Application examples:**
corridors/hallways, staircases, toilets, equipment rooms

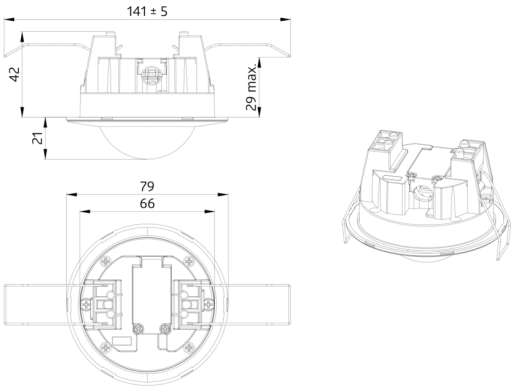
141 ± 5
42
29 max.
21
79
66

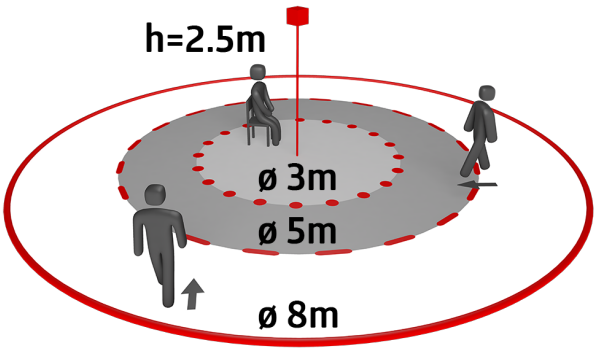
h=2.5m
ø 3m
ø 5m
ø 8m

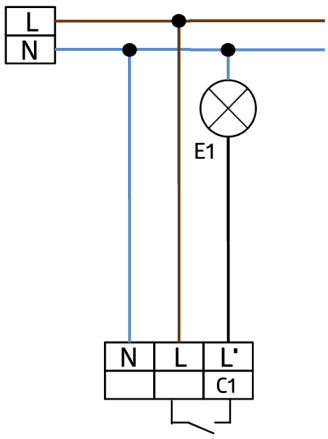
L
N
E1
N
L
L'
C1

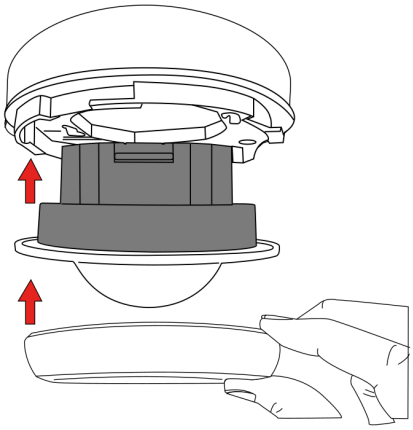

## Accessories




**RC-Arc extinction kit**
Art.No: 10880

Voltage: 230 V AC ±10%
Dimensions: 38 x 12 x 26 mm
Degree / class of protection: IP20 / Class II




**Mini-RC-Arc extinction kit**
Art.No: 10882

Voltage: 230 V AC ±10%
Dimensions: 50 x 23 x 8 mm
Degree / class of protection: IP20 / Class II

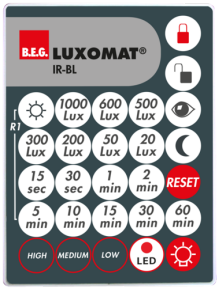


**IR-BL**
Art.No: 93055

Battery: 3.0 V Lithium CR2032 (inclusive)
Dimensions: 80 x 60 x 8 mm
Housing: polycarbonate, UV-resistant




**BLE-IR-Adapter**
Art.No: 93067

Dimensions: 40 x 55 x 103 mm
Material color: black
Frequency: 2.4 GHz ISM band, GFSK 0.2 dBm + 5.3 dBi = 5.5 dBm




**Mounting set BL2-SM**
Art.No: 93256

Dimensions: Ø 109 x 50 mm
Degree / class of protection: IP23
Material color: white

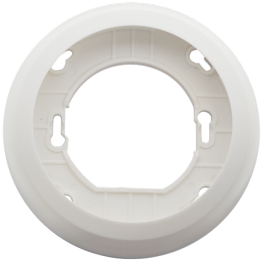

**Mounting set BL2-FM**
Art.No: 93251

Dimensions: Ø 104 x 19 mm
Material color: white

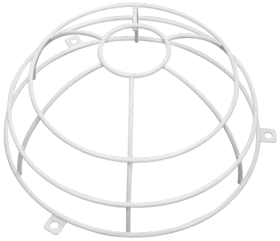

**Wire basket BSK (Ø 200 x 90 mm)**
Art.No: 92199

Dimensions: Ø 200 x 90 mm
Impact strength: IK09
Housing: coated steel basket