B.E.G. LUXOMAT® net



BIA4-KNXs REG

90411 EAN: 4007529904112

KNX binary input for DIN rail mounting with four galvanically isolated inputs for external voltages ranging from 12 to 230 V.

Order data

Designation	Colour	Art.No
BIA4-KNXs REG	-	90411

Technical data

Voltage:	via KNX BUS
Dimensions:	55 x 18 x 90 mm (1 TE)
Typ. power input:	3 mA
Degree / class of protection:	IP20 / Class II
Ambient temperature:	-5 °C to +45 °C
Housing:	polycarbonate, UV-resistant
Material color:	-
KNX TP 256:	Yes
KNX Secure:	Yes
Connections and wires:	1 x KNX bus terminal black/red 6 x Screw terminals 0.34 ... 2.5 mm² rigid 0.34 ... 2.5 mm² fine-wired

Product information

Compact binary input with 4 channels for controlling luminaires, blinds, etc

KNX Secure ready

Galvanically isolated inputs for external voltage from 12 to 230 V

Use as a pulse counter is possible

Two push-buttons and three LEDs enable local operation and visualisation of the unit's status

In addition to the input channels, the unit contains 16 independent logic or time functions

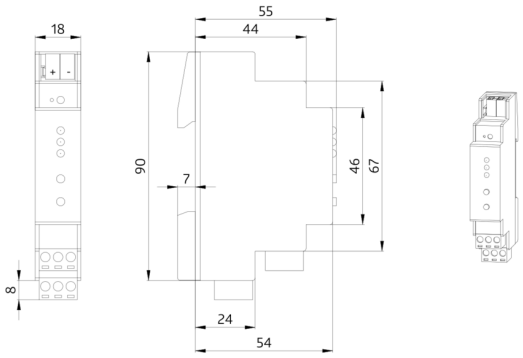
18
55
44
90
7
46
67
8
24
54

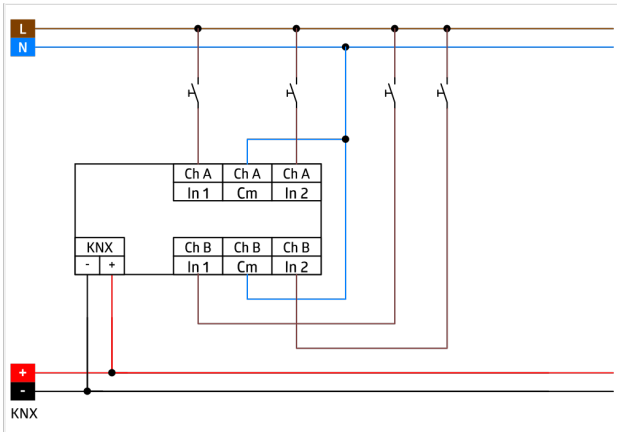
L
N
Ch A
In 1
Ch A
Cm
Ch A
In 2
KNX
-
+
Ch B
In 1
Ch B
Cm
Ch B
In 2
+
-
KNX