B.E.G. SAFETYLUX®



BD21/6/3-LLD

93002 EAN: 4007529930029

Illuminated exit sign / pictorial emergency sign with single battery

Sturdy plastic case IP54

Visibility range 21 m

Order data

Designation	Colour	Art.No
BD21/6/3-LLD	white	93002

Technical data

Voltage:	230 V AC +/- 10% 50 Hz
Dimensions:	250 x 135 x 150 mm
Lamp:	8 W Fluorescent lamp T16
Visibility range:	21
Operation mode:	Permanent operation, Wake up mode
Luminous flux / intensity:	Colour temperature: 4000 K neutral white
Luminous flux / intensity:	8 W Fluorescent lamp T16
Degree / class of protection:	IP54 / Class II
Ambient temperature:	+5 °C to +35 °C
Housing:	Polycarbonate
Material color:	white
Battery	
Accu:	NiMh 3.6 V 4000 mAh
Nominal operation duration:	3 h
Monitoring	
Local surveillance:	Button for operation check

Product information

Illuminated exit sign / pictorial emergency sign with single battery

Sturdy plastic case IP54

Visibility range 21 m

Eco-friendly NiMH battery

Nominal operating time 3 hours

Button for operation check (on the housing)

Lamp, battery and four pictograms included

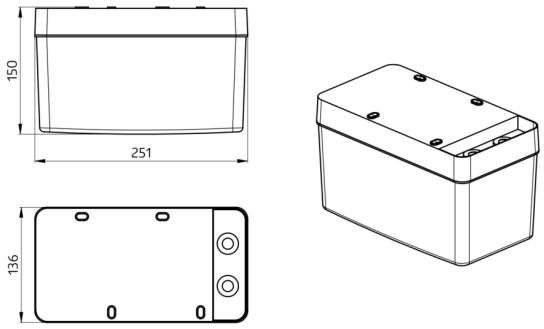
150
251
136