B.E.G. LUXOMAT®



Aleum Glow AD Set 93134-92467

230V PIR outdoor motion detector with 180° detection angle and a range of up to 16 m (400 m²), featuring anti-creep protection, ambient light, and Bluetooth configuration

Order data

Designation	Colour	Art.No
Aleum Glow AD	anthracite	93134
Wire basket BSK (Ø 164 x 143 mm)	white	92467

Technical data

Voltage:	230 V AC ±10% 50 / 60 Hz
Dimensions:	**Ø 164 x 143 mm (92467)**
Settings:	B.E.G. App "B.E.G. One" / "B.E.G. MyControl" (Bluetooth)
Power consumption:	approx. 0.5 W
Detection area:	horizontal 180° (Wall mounting)
Range:	max. 16 m across max. 5 m towards max. 3 m anti-creep protection
Monitored area (tangential movement):	400 m² / 2.5 m mounting height
Mounting height min./max./recommended:	2 m / 4 m / 2.5 m
Degree / class of protection:	IP54 / Class II
Impact strength:	**IK09 (92467)**
Ambient temperature:	-25 °C to +50 °C
Housing:	**polycarbonate, UV-resistant + coated steel basket (92467)**
Material color:	anthracite mat, similar to RAL7016
Connections and wires:	for solid conductors 0.5 – 2.5 mm²
Channel 1 (lighting control)	
Switching power:	2300 W, cos φ = 1 1150 VA, cos φ = 0.5 800 W LED max. inrush current Ip (20 ms) = 165 A max. inrush current Ip (200 µs) = 800 A
Type of contact (k):	1x µ-contact, NO contact with tungsten pre-make contact
Follow-up time:	10 sec – 30 min, Pulse
Ambient light:	0 – 100 % / 10 s – 6 h / 16 colours
Switch-on threshold:	10 – 2500 Lux

Product information

Set : Aleum Glow AD + Wire basket BSK (Ø 164 x 143 mm) white

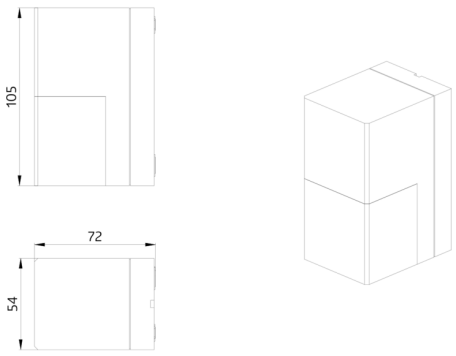
105
72
54

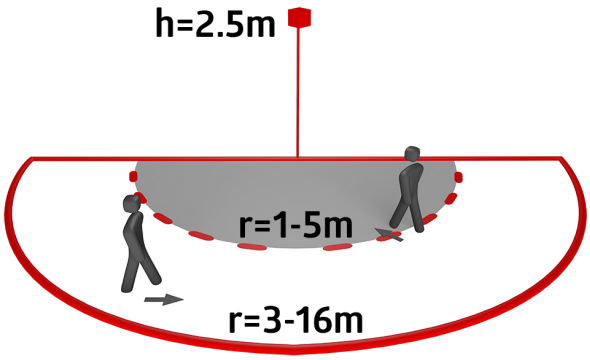
h=2.5m
r=1-5m
r=3-16m

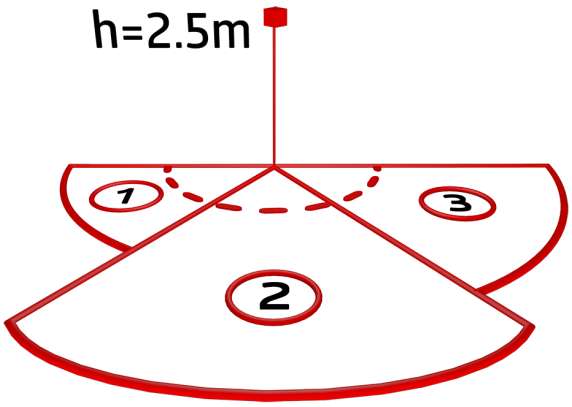
h=2.5m
1
2
3

B.E.G. MyControl

B.E.G. One App



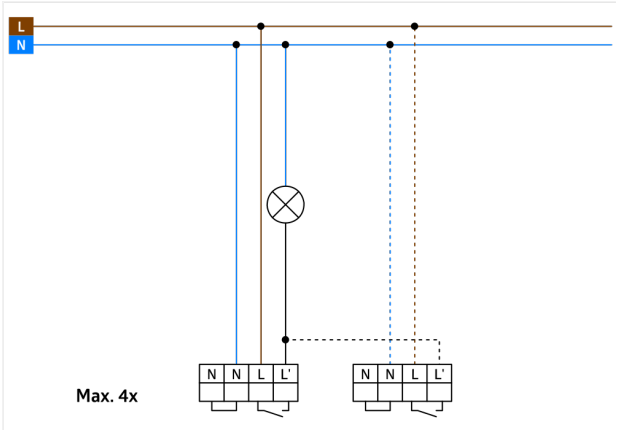

Set items

To receive the bundle according to the technical specification, please order the items listed.



Aleum Glow AD
Art.No: 93134

Voltage: 230 V AC ±10% 50 / 60 Hz
Dimensions: 105 x 54 x 71 mm
Settings: B.E.G. App "B.E.G. One" / "B.E.G. MyControl" (Bluetooth)



Wire basket BSK (Ø 164 x 143 mm)
Art.No: 92467

Dimensions: Ø 164 x 143 mm
Impact strength: IK09
Housing: coated steel basket