B.E.G. LUXOMAT®



Aleum Glow AD

93134 EAN: 4007529931347

230V PIR outdoor motion detector with 180° detection angle and a range of up to 16 m (400 m²), featuring anti-creep protection, ambient light, and Bluetooth configuration

Order data

Designation	Colour	Art.No
Aleum Glow AD	anthracite	93134

Accessories

Designation	Colour	Art.No
RC-Arc extinction kit	white	10880
Mini-RC-Arc extinction kit		10882
Wire basket BSK (Ø 164 x 143 mm)	white	92467

Technical data

Voltage:	230 V AC ±10% 50 / 60 Hz
Dimensions:	105 x 54 x 71 mm
Settings:	B.E.G. App "B.E.G. One" / "B.E.G. MyControl" (Bluetooth)
Power consumption:	approx. 0.5 W
Detection area:	horizontal 180° (Wall mounting)
Range:	max. 16 m across max. 5 m towards max. 3 m anti-creep protection
Monitored area (tangential movement):	400 m² / 2.5 m mounting height
Mounting height min./max./recommended:	2 m / 4 m / 2.5 m
Degree / class of protection:	IP54 / Class II
Impact strength:	IK03
Ambient temperature:	-25 °C to +50 °C
Housing:	polycarbonate, UV-resistant
Material color:	anthracite mat, similar to RAL7016
Connections and wires:	for solid conductors 0.5 – 2.5 mm²
Channel 1 (lighting control)	
Switching power:	2300 W, cos φ = 1 1150 VA, cos φ = 0.5 800 W LED max. inrush current Ip (20 ms) = 165 A max. inrush current Ip (200 µs) = 800 A
Type of contact (k):	1x µ-contact, NO contact with tungsten pre-make contact
Follow-up time:	10 sec – 30 min, Pulse
Ambient light:	0 – 100 % / 10 s – 6 h / 16 colours
Switch-on threshold:	10 – 2500 Lux

Product information

Motion detector with 180° detection area and creep protection

Ambient light

Further functions can be set via Bluetooth using the B.E.G. app

Mechanical range adjustment of different PIRs

Different follow-up time depending on direction of movement

Uninterrupted parallel circuit detection of several detectors

Immediate operation using factory settings

Zero crossing switching

Faulty switching due to animals can be avoided by reducing the sensitivity

Easy mounting thanks to plug base

Bluetooth can be switched off

Wall installation

Factory settings 3 min, 20 lux, PIR sensitivity: max
ambient light colour: white; brightness: 100%; follow-up time: 5 min

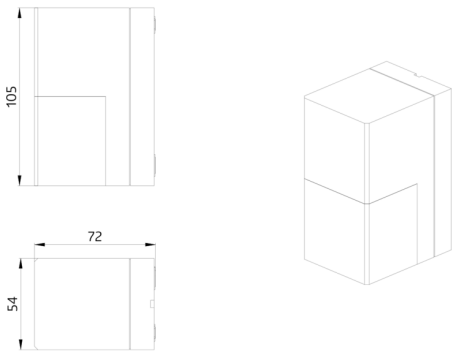
105
72
54

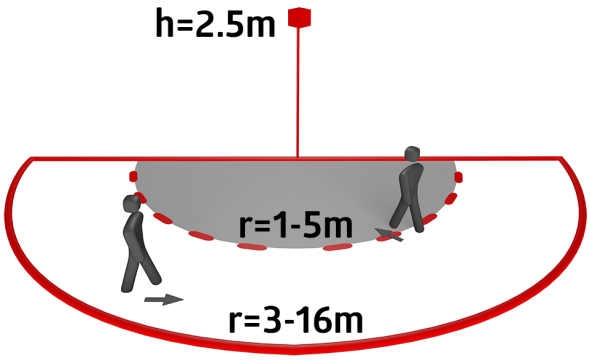
h=2.5m
r=1-5m
r=3-16m

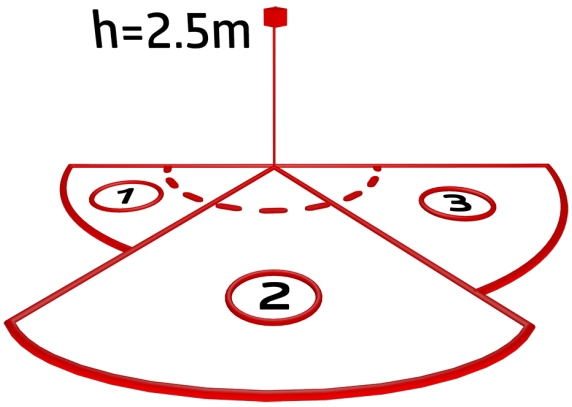
h=2.5m
1
2
3

B.E.G. MyControl

B.E.G. One App



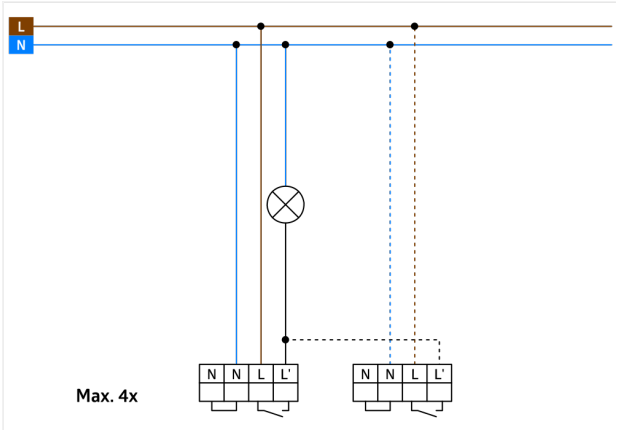

Accessories



RC-Arc extinction kit
Art.No: 10880

Voltage: 230 V AC ±10%
Dimensions: 38 x 12 x 26 mm
Degree / class of protection: IP20 / Class II



Mini-RC-Arc extinction kit
Art.No: 10882

Voltage: 230 V AC ±10%
Dimensions: 50 x 23 x 8 mm
Degree / class of protection: IP20 / Class II



Wire basket BSK (Ø 164 x 143 mm)
Art.No: 92467

Dimensions: Ø 164 x 143 mm
Impact strength: IK09
Housing: coated steel basket