B.E.G. LUXOMATIC®



ALC-B-360 SLU

91321 EAN: 4007529913213

230V outdoor light base in black with E27 socket (max. 100W), built-in 350° motion sensor, anti-creep protection, and twilight switch, IP44; can be combined with system lenses.

Order data

Designation	Colour	Art.No
ALC-B-360 SLU	black	91321

Accessories

Designation	Colour	Art.No
SG Wien	white	94113
SG Oslo	transparent	94101
Corner socket ALC-ES	black	91325
Corner socket ALC-ES	white	91305

Technical data

Voltage:	230 V AC +/- 10% 50 / 60 Hz
Dimensions:	185 x 107 x 147 mm
Lamp:	max. 100 W with bulb socket E 27
Photobiological safety:	RG 0
Degree / class of protection:	IP44 / Class II
Ambient temperature:	-10 °C to +40 °C
Housing:	polycarbonate, UV-resistant
Material color:	black
Motion detector	
Switching power:	1000 W, cos φ = 1 500 VA, cos φ = 0.5
Detection area:	horizontal 350° (Wall mounting)
Range:	max. 10 m across max. 6 m towards max. 4 m anti-creep protection
Follow-up time:	4 sec – 10 min
Switch-on threshold:	2 – 1000 Lux

Product information

System light lower sections ALC-B/-K with motion detector and twilight switch

ALC-B combinable with various system glasses. ALC-K includes system glass Crystal!

Vertical detection range 360° and horizontal detection range 120°

Wall or outer corner installation

Time-saving single-handed plug-in base installation

Optional connection of additional lights switched by the one motion detector

Supply without lamp

Application examples:
entrances, garages, patios, balconies, at entrance gates

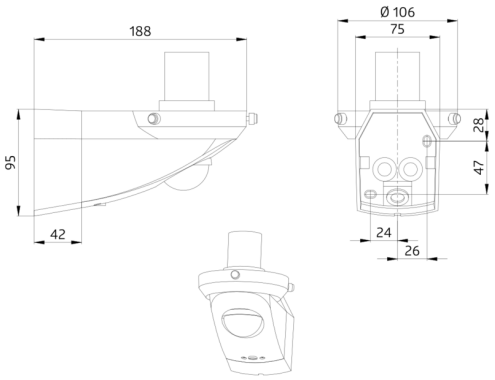

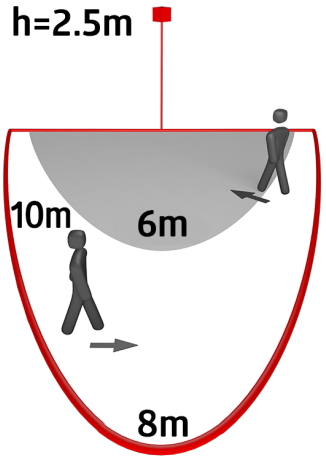

h (m)	Ø (m)	E (lx)
1.0	–	51
2.0	–	13
3.0	–	6
4.0	–	3
5.0	–	2

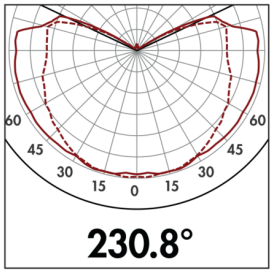

Accessories

SG Wien
Art.No: 94113

Dimensions: (Rim Ø 82 mm) Ø 200 x 210 mm
Housing: opal - glossy
Material color: white



Corner socket ALC-ES
Art.No: 91305

Housing: polycarbonate, UV-resistant
Material color: white



SG Oslo
Art.No: 94101

Dimensions: (Rim Ø 82 mm) Ø 215 x 220 mm
Housing: bubble glass - Crystal
Material color: transparent



Corner socket ALC-ES
Art.No: 91325

Housing: polycarbonate, UV-resistant
Material color: black