# AL93-20-300-LED-3C-HF

93632 EAN: 4007529936328





20W LED round ceiling-mounted light with integrated high-frequency motion sensor, three selectable light colors (3000/4000/5700K), up to 1850 lm, IP54, and UGR < 19.

## Order data

| Designation | Colour | Art.No |
|---|---|---|
| AL93-20-300-LED-3C-HF | white | 93632 |

## Areas of application

- corridors/hallways
- staircases
- toilets
- equipment rooms
- entrance halls
- plumbed rooms/bathrooms

## Technical data

| | |
|---|---|
| Voltage: | 220 – 240 V AC 50 / 60 Hz |
| Dimensions: | Ø 300 x 51.3 mm |
| Colour temperature: | 3000 / 4000 / 5700 K |
| Luminous flux / intensity: | 1600 / 1850 / 1700 lm |
| Anti-glare: | UGR < 19 |
| Efficiency: | 80 / 92 / 85 lm/W |
| Photobiological safety: | RG 0 |
| Colour reproduction: | CRI > 80 |
| Rated life time: | 50000 h (L80/B10) |
| Power consumption: | 20 W / PF 0.9 |
| Degree / class of protection: | IP54 / Class II |
| Flammability rating: | UL-94 V2, 750 °C |
| Impact strength: | IK08 |
| Ambient temperature: | -20 °C to +45 °C |
| Housing: | Polycarbonate / ADC12 |
| Material color: | white, similar to RAL9016 |
| **Microwave detector** | |
| Radar / HF technology: | 5.8 GHz, < 0.5 mW |
| Detection area: | horizontal 360° (Ceiling mounting) Ø 2 – 8 m |
| Range: | max. Ø 14 m towards |
| Follow-up time: | 5 sec – 30 min |
| Switch-on threshold: | inactive / 5 – 50 Lux |

## Product information

Flat round LED luminaires for ceiling mounting

Three colours in one light, switchable selection between warm, neutral or daylight white illumination

Energy efficient light with long service life > 50,000 hours

Anti-glare system with recessed LED and diffusers

Integrated microwave sensor, not externally visible, wide detection range

HF technology: 5.8 GHz - reacts to the smallest motion, independently of temperature

DIP switches to set follow-up time, switch-on threshold and sensor sensitivity

Sturdy plastic case made of polycarbonate

Easy installation with a socket incl. Clamps

**Application examples:**
corridors/hallways, staircases, toilets, equipment rooms, entrance halls, plumbed rooms/bathrooms

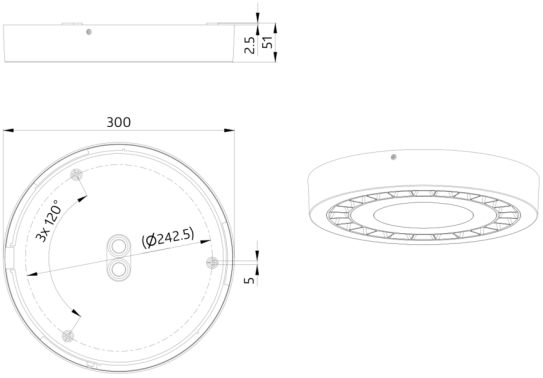


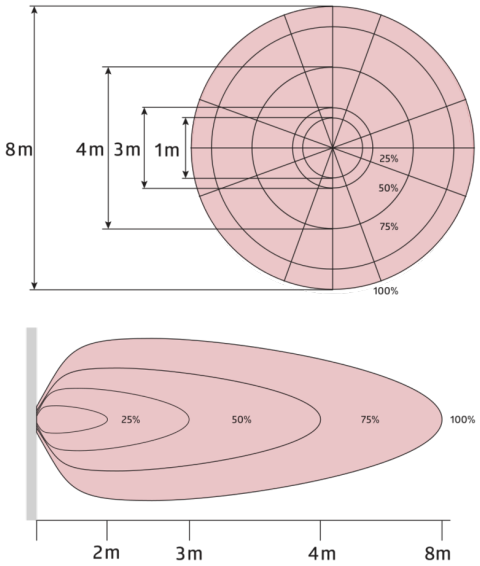


| h (m) | Ø (m) | E (lx) |
|---|---|---|
| 1.0 | 1.2 | 1518 |
| 2.0 | 2.5 | 379 |
| 3.0 | 3.7 | 169 |
| 4.0 | 4.9 | 95 |
| 5.0 | 6.1 | 61 |

