AL93-20-300-LED-3C



93633 EAN: 4007529936335

20W LED round ceiling-mounted light without a built-in sensor, with three selectable light colors (3000/4000/5700K), up to 1850 lm, IP54, and UGR < 19.

Order data

Designation	Colour	Art.No
AL93-20-300-LED-3C	white	93633

Areas of application

- corridors/hallways
- staircases
- toilets
- equipment rooms
- entrance halls
- plumbed rooms/bathrooms

Technical data

Voltage:	220 – 240 V AC 50 / 60 Hz
Dimensions:	Ø 300 x 51.3 mm
Colour temperature:	3000 / 4000 / 5700 K
Luminous flux / intensity:	1600 / 1850 / 1700 lm
Anti-glare:	UGR < 19
Efficiency:	80 / 92 / 85 lm/W
Photobiological safety:	RG 0
Colour reproduction:	CRI > 80
Rated life time:	50000 h (L80/B10)
Power consumption:	20 W / PF 0.8
Degree / class of protection:	IP54 / Class II
Flammability rating:	UL-94 V2, 750 °C
Impact strength:	IK08
Ambient temperature:	-20 °C to +45 °C
Housing:	Polycarbonate / ADC12
Material color:	white, similar to RAL9016

Product information

Flat round LED luminaires for ceiling mounting

Three colours in one light, switchable selection between warm, neutral or daylight white illumination

Energy efficient light with long service life > 50,000 hours

Anti-glare system with recessed LED and diffusers

Sturdy plastic case made of polycarbonate

Easy installation with a socket incl. Clamps

Application examples:
corridors/hallways, staircases, toilets, equipment rooms, entrance halls, plumbed rooms/bathrooms

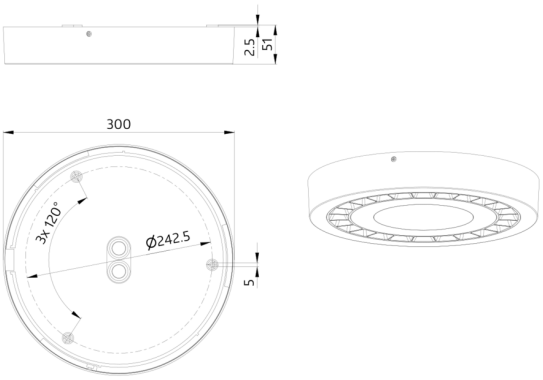

h (m)	Ø (m)	E (lx)
1.0	1.2	1518
2.0	2.5	379
3.0	3.7	169
4.0	4.9	95
5.0	6.1	61

