B.E.G. LUXOMATIC®



AL8-25-300-LEDN-HF

93631 EAN: 4007529936311

25W LED round light with built-in 5.8-GHz RF motion sensor, 2500 lm at 4000 K, 360° detection range up to Ø12 m, and impact-resistant housing (IK10).

Order data

Designation	Colour	Art.No
AL8-25-300-LEDN-HF	white	93631

Areas of application

- equipment rooms
- corridors/hallways
- staircases
- toilets
- entrance halls
- plumbed rooms/bathrooms

Accessories

Designation	Colour	Art.No
Protection ring AL8	white	93014

Technical data

Voltage:	200 – 240 V AC 50 Hz
Dimensions:	Ø 300 x 50 mm
Colour temperature:	4000 K
Luminous flux / intensity:	2500 lm
Anti-glare:	UGR < 25
Efficiency:	100 lm/W
Photobiological safety:	RG 0
Colour reproduction:	CRI > 80 / TM30: 82
Rated life time:	50000 h (L80/B10)
Power consumption:	25 W / PF 0.9
Degree / class of protection:	IP20 / Class II
Flammability rating:	UL-94 V2, 750°C
Impact strength:	IK10
Ambient temperature:	-20 °C to +45 °C
Housing:	polycarbonate, UV-resistant
Material color:	white, similar to RAL9016
Microwave detector	
Radar / HF technology:	5.8 GHz, < 0.5 mW
Detection area:	horizontal 360° (Ceiling mounting) Ø null – 12 m
Range:	max. Ø 14 m towards
Follow-up time:	20 sec – 10 min
Switch-on threshold:	inactive / 5 – 50 Lux

Product information

Flat round LED luminaires for wall or ceiling mounting

Energy efficient light with long service life > 50,000 hours

Broad light distribution using diffused light covers

Integrated microwave sensor, not externally visible, wide detection range

HF technology: 5.8 GHz - reacts to the smallest motion, independently of temperature

DIP switches to set follow-up time, switch-on threshold and sensor sensitivity

Sturdy plastic case made of polycarbonate

high fire protection rating

Simple mounting with separate mounting bracket

Application examples:
equipment rooms, corridors/hallways, staircases, toilets, entrance halls, plumbed rooms/bathrooms

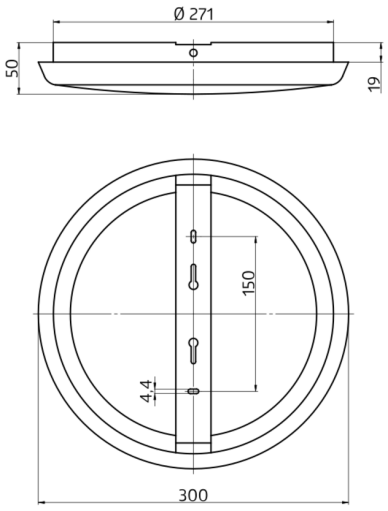

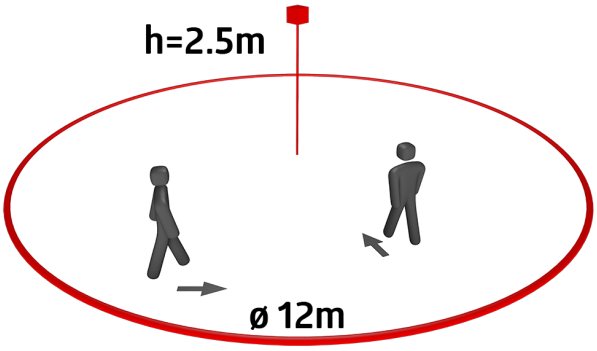

h (m)	Ø (m)	E (lx)
1.0	3	874
2.0	6.1	219
3.0	9.1	97
4.0	12.2	55
5.0	15.2	35

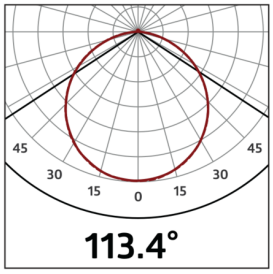

Accessories



Protection ring AL8
Art.No: 93014

Dimensions: Ø 305 x 19 mm
Material color: white