B.E.G. LUXOMATIC®



# AL8-25-300-LED-3C-HF

93141 EAN: 4007529931415

25W LED round light with integrated 5.8-GHz RF motion sensor and three selectable light colors (3000/4000/5700K), up to 2500 lm, IK10.

## Order data

| Designation | Colour | Art.No |
|---|---|---|
| AL8-25-300-LED-3C-HF | white | 93141 |

## Areas of application

- equipment rooms
- corridors/hallways
- staircases
- toilets
- entrance halls
- plumbed rooms/bathrooms

## Accessories

| Designation | Colour | Art.No |
|---|---|---|
| Protection ring AL8 | white | 93014 |

## Technical data

| | |
|---|---|
| Voltage: | 200 – 240 V AC 50 Hz |
| Dimensions: | Ø 300 x 50 mm |
| Colour temperature: | 3000 / 4000 / 5700 K |
| Luminous flux / intensity: | 2000 / 2500 / 2400 lm |
| Anti-glare: | UGR < 25 |
| Efficiency: | 80 / 100 / 96 lm/W |
| Photobiological safety: | RG 0 |
| Colour reproduction: | CRI > 80 / TM30: 82 |
| Rated life time: | 50000 h (L80/B10) |
| Power consumption: | 25 W / PF 0.9 |
| Degree / class of protection: | IP20 / Class II |
| Flammability rating: | UL-94 V2, 750 °C |
| Impact strength: | IK10 |
| Ambient temperature: | -20 °C to +45 °C |
| Housing: | polycarbonate, UV-resistant |
| Material color: | white, similar to RAL9016 |
| **Microwave detector** | |
| Radar / HF technology: | 5.8 GHz, < 0.5 mW |
| Detection area: | horizontal 360° (Ceiling mounting) Ø 2 – 12 m |
| Range: | max. Ø 14 m towards |
| Follow-up time: | 20 sec – 10 min |
| Switch-on threshold: | inactive / 5 – 50 Lux |

## Product information

Flat round LED luminaires for wall or ceiling mounting

Three colours in one light, switchable selection between warm, neutral or daylight white illumination

Energy efficient light with long service life > 50,000 hours

Broad light distribution using diffused light covers

Integrated microwave sensor, not externally visible, wide detection range

HF technology: 5.8 GHz - reacts to the smallest motion, independently of temperature

DIP switches to set follow-up time, switch-on threshold and sensor sensitivity

Sturdy plastic case made of polycarbonate

high fire protection rating

Simple mounting with separate mounting bracket

**Application examples:**
equipment rooms, corridors/hallways, staircases, toilets, entrance halls, plumbed rooms/bathrooms

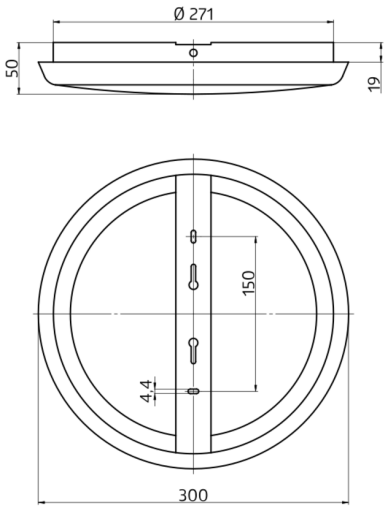


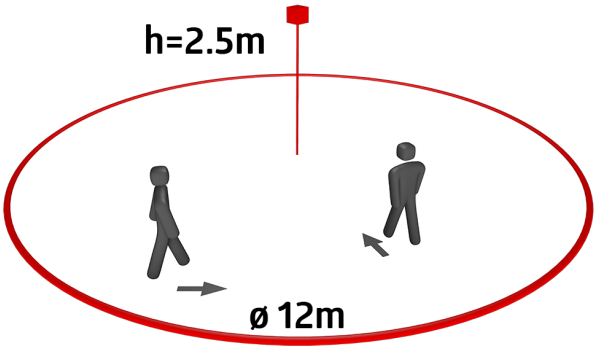


| h (m) | Ø (m) | E (lx) |
|---|---|---|
| 1.0 | 3 | 874 |
| 2.0 | 6.1 | 219 |
| 3.0 | 9.1 | 97 |
| 4.0 | 12.2 | 55 |
| 5.0 | 15.2 | 35 |

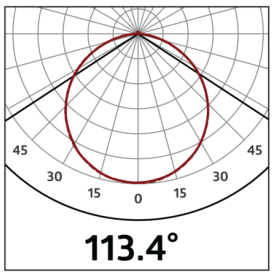

## Accessories



**Protection ring AL8**
Art.No: 93014

Dimensions: Ø 305 x 19 mm
Material color: white