AL8-25-300-LED-3C

93621 EAN: 4007529936212

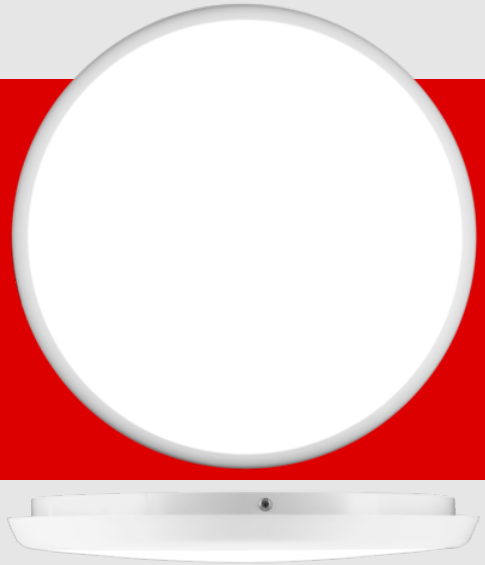

25W LED round light without a built-in alarm, with three selectable light colors (3000/4000/5700K), up to 2500 lm, externally dimmable, IP54 and IK10.

Order data

Designation	Colour	Art.No
AL8-25-300-LED-3C	white	93621

Areas of application

- equipment rooms
- corridors/hallways
- staircases
- toilets
- entrance halls
- plumbed rooms/bathrooms

Accessories

Designation	Colour	Art.No
Protection ring AL8	white	93014

Technical data

Voltage:	200 – 240 V AC 50 Hz
Dimensions:	Ø 300 x 42 mm
Colour temperature:	3000 / 4000 / 5700 K
Luminous flux / intensity:	2000 / 2500 / 2400 lm
Anti-glare:	UGR < 25
Efficiency:	80 / 100 / 96 lm/W
Photobiological safety:	RG 0
Colour reproduction:	CRI > 80 / TM30: 82
Rated life time:	50000 h (L80/B10)
Power consumption:	25 W / PF 0.9
Degree / class of protection:	IP54 / Class II
Flammability rating:	UL-94 V2, 750 °C
Impact strength:	IK10
Ambient temperature:	-20 °C to +45 °C
Housing:	polycarbonate, UV-resistant
Material color:	white, similar to RAL9016

Product information

Flat round LED luminaires for wall or ceiling mounting

Three colours in one light, switchable selection between warm, neutral or daylight white illumination

Every colour temperature is externally dimmable

Energy efficient light with long service life > 50,000 hours

Broad light distribution using diffused light covers

Sturdy plastic case made of polycarbonate

high fire protection rating

water-protected (IP54) after installation

Simple mounting with separate mounting bracket

Application examples:
equipment rooms, corridors/hallways, staircases, toilets, entrance halls, plumbed rooms/bathrooms

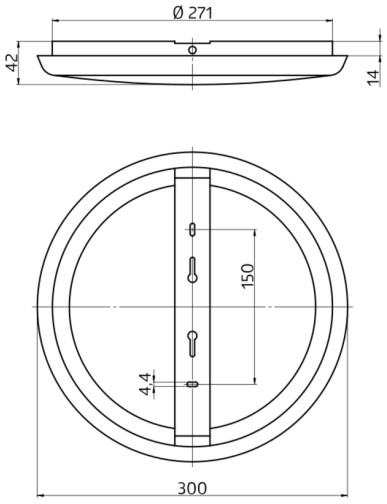

h (m)	Ø (m)	E (lx)
1.0	3	874
2.0	6.1	219
3.0	9.1	97
4.0	12.2	55
5.0	15.2	35

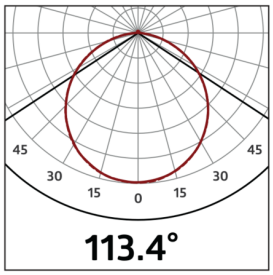

Accessories



Protection ring AL8
Art.No: 93014

Dimensions: Ø 305 x 19 mm
Material color: white