B.E.G. LUXOMATIC®



AL12-25-300-LED-3C-HF

93145 EAN: 4007529931453

25W LED light with built-in 5.8-GHz RF motion sensor, three selectable light colors (3000/4000/5700K), up to 2700 lm, IK10.

Order data

Designation	Colour	Art.No
AL12-25-300-LED-3C-HF	white	93145

Areas of application

- equipment rooms
- corridors/hallways
- staircases
- toilets
- entrance halls
- plumbed rooms/bathrooms

Technical data

Voltage:	200 – 240 V AC 50 Hz
Dimensions:	300 x 300 x 51 mm
Colour temperature:	3000 / 4000 / 5700 K
Luminous flux / intensity:	2500 / 2700 / 2600 lm
Anti-glare:	UGR < 25
Efficiency:	100 / 108 / 104 lm/W
Photobiological safety:	RG 0
Colour reproduction:	CRI > 80 / TM30: 82
Rated life time:	50000 h (L80/B10)
Power consumption:	25 W / PF 0.9
Degree / class of protection:	IP20 / Class II
Flammability rating:	UL-94 V2, 750 °C
Impact strength:	IK10
Ambient temperature:	-20 °C to +45 °C
Housing:	polycarbonate, UV-resistant
Material color:	white, similar to RAL9016
Microwave detector	
Radar / HF technology:	5.8 GHz, < 0.5 mW
Detection area:	horizontal 360° (Ceiling mounting) Ø 2 – 12 m
Range:	max. Ø 14 m towards
Follow-up time:	20 sec – 10 min
Switch-on threshold:	inactive / 5 – 50 Lux

Product information

Flat LED light for wall or ceiling mounting

Three colours in one light, switchable selection between warm, neutral or daylight white illumination

Energy efficient light with long service life > 50,000 hours

Broad light distribution using diffused light covers

Integrated microwave sensor, not externally visible, wide detection range

HF technology: 5.8 GHz - reacts to the smallest motion, independently of temperature

DIP switches to set follow-up time, switch-on threshold and sensor sensitivity

Sturdy plastic case made of polycarbonate

high fire protection rating

Simple mounting with separate mounting bracket

Application examples:
equipment rooms, corridors/hallways, staircases, toilets, entrance halls, plumbed rooms/bathrooms

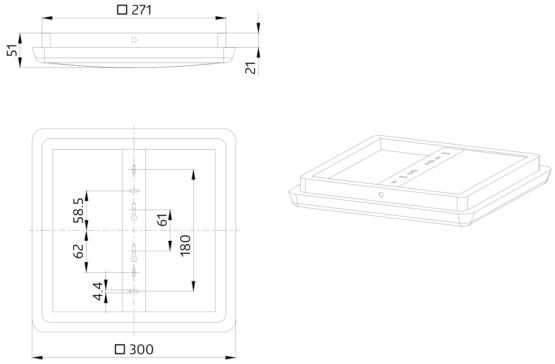

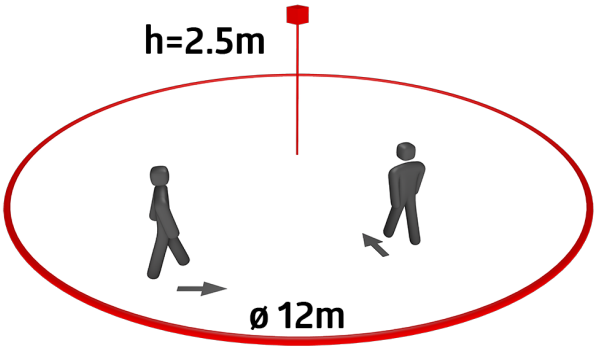

h (m)	Ø (m)	E (lx)
1.0	3	874
2.0	6.1	219
3.0	9.1	97
4.0	12.2	55
5.0	15.2	35

