B.E.G. SAFETYLUX®



2DN32/6/3DALI-LED

1215 EAN: 4007529012152

LED emergency light with single battery

Sturdy plastic case IP54

Bright and even illumination

Order data

Designation	Colour	Art.No
2DN32/6/3DALI-LED	white	1215

Accessories

Designation	Colour	Art.No
BLE-IR-Adapter	black	93067
IR-Adapter for Smartphones	black	92726
Pictogram two-sided/right-left	green	8860
Pictogram DT32-LED down arrow	green	8785
Pictogram DT32-LED right arrow	green	8858
Pictogram DT32-LED left arrow	green	8859

Technical data

Voltage:	230 V AC +/- 10% 50 Hz
Dimensions:	359 x 90 x 215 mm
Operation mode:	Permanent operation, Wake up mode
Luminous flux / intensity:	LED circuit board 12 x 0.5 W Colour temperature: 6500 K daylight white
Degree / class of protection:	IP54 / Class II
Ambient temperature:	0 °C to +35 °C
Housing:	Polycarbonate
Material color:	white, similar to RAL9010
Single-battery luminaire	
Accu:	NiMH 3.6 V 4000 mAh
Nominal operation duration:	3 h
Monitoring	
Local surveillance:	automatic self-test
Central monitoring:	Dali-Bus B.E.G.-DALI-SYS

Product information

LED emergency light with single battery

Sturdy plastic case IP54

Bright and even illumination

Environmentally friendly NiMH battery with deep discharge protection

Bidirectionally remote control-capable with the IR adapter and the B.E.G. smartphone app

Automatic self-test with a two-colour status LED

Incl. LED illuminant, battery and four pictograms

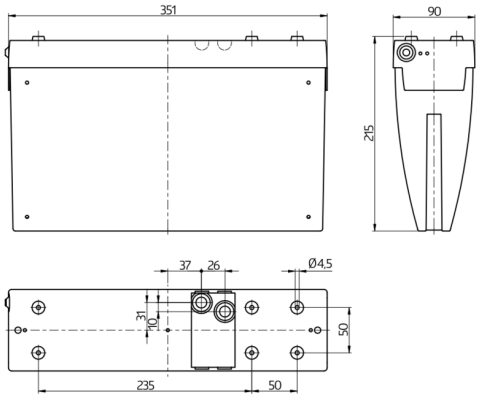
351
90
215
37
26
Ø4.5
31
10
50
235
50

Accessories



BLE-IR-Adapter
Art.No: 93067

Dimensions: 40 x 55 x 103 mm
Material color: black
Frequency: 2.4 GHz ISM band, GFSK 0.2 dBm + 5.3 dBi = 5.5 dBm



IR-Adapter for Smartphones
Art.No: 92726

Dimensions: 47 x 19 x 10 mm
Degree / class of protection: IP20
Ambient temperature: -20 °C to +40 °C



Pictogram two-sided/right-left
Art.No: 8860

Dimensions: 170 x 330 x 1 mm
Housing: Plastic
Material color: green



Pictogram DT32-LED down arrow
Art.No: 8785

Dimensions: 170 x 330 x 1 mm
Housing: Plastic
Material color: green



Pictogram DT32-LED right arrow
Art.No: 8858

Dimensions: 170 x 330 x 1 mm
Housing: Plastic
Material color: green



Pictogram DT32-LED left arrow
Art.No: 8859

Dimensions: 170 x 330 x 1 mm
Housing: Plastic
Material color: green