B.E.G. SAFETYLUX®



2DN14/8/EVG

7894 EAN: 4007529078943

Illuminated exit / emergency sign

Sturdy plastic case IP54

Visibility range 14 m

Order data

Designation	Colour	Art.No
2DN14/8/EVG	white	7894

Accessories

Designation	Colour	Art.No
Wire basket BSK SL20	white	7888

Technical data

Voltage:	230 V AC +/- 10% 50 Hz
Dimensions:	359 x 90 x 105 mm
Lamp:	8 W Fluorescent lamp T16
Visibility range:	14
Luminous flux / intensity:	8 W Fluorescent lamp T16 (inclusive)
Degree / class of protection:	IP54 / Class II
Ambient temperature:	+5 °C to +35 °C
Housing:	Polycarbonate
Material color:	white

Product information

Illuminated exit / emergency sign

Sturdy plastic case IP54

Visibility range 14 m

Button for operation check (on the housing)

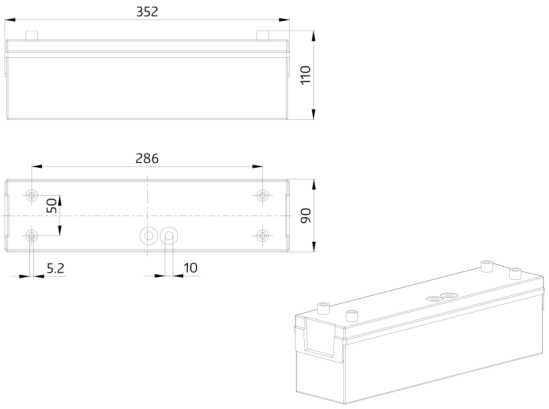
352
110
286
50
90
5.2
10

Accessories



Wire basket BSK SL20
Art.No: 7888

Dimensions: 132 x 402 x 151 mm
Housing: coated steel basket
Material color: white