B.E.G. SAFETYLUX®



2DN-H25/8/EVG

7193 EAN: 4007529071937

Illuminated exit sign / pictorial emergency sign with single battery

Sturdy plastic case IP54

Visibility range 25 m

Order data

Designation	Colour	Art.No
2DN-H25/8/EVG	white	7193

Accessories

Designation	Colour	Art.No
Wire basket BSK 2DN KR26 KR36	white	7887

Technical data

Voltage:	230 V AC +/- 10% 50 Hz
Dimensions:	359 x 90 x 163 mm
Lamp:	8 W Fluorescent lamp T16
Visibility range:	25
Luminous flux / intensity:	8 W Fluorescent lamp T16 (inclusive)
Degree / class of protection:	IP54 / Class II
Ambient temperature:	+5 °C to +35 °C
Housing:	Polycarbonate
Material color:	white

Product information

Illuminated exit sign / pictorial emergency sign with single battery

Sturdy plastic case IP54

Visibility range 25 m

Eco-friendly NiMH battery

Button for operation check (on the housing)

Lamp, battery and four pictograms included

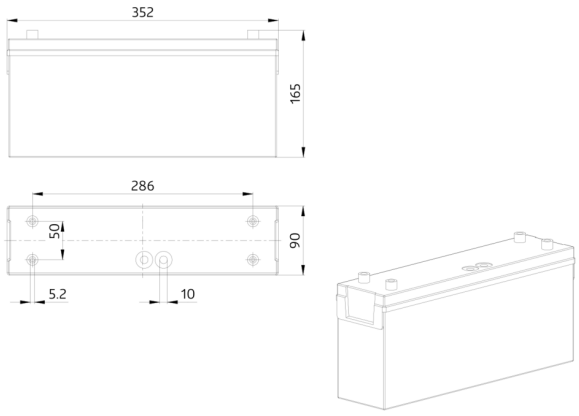
352
165
286
50
90
5.2
10

Accessories

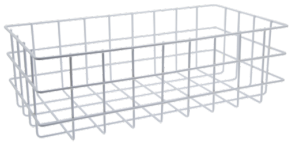

Wire basket BSK 2DN KR26 KR36
Art.No: 7887

Dimensions: 442 x 241 x 143 mm
Housing: coated steel basket
Material color: white