B.E.G. SAFETYLUX®



2DN-H25/8/3-LLD

7191 EAN: 4007529071913

Illuminated exit sign / pictorial emergency sign with single battery

Sturdy plastic case IP54

Visibility range 25 m

Order data

Designation	Colour	Art.No
2DN-H25/8/3-LLD	white	7191

Accessories

Designation	Colour	Art.No
Wire basket BSK 2DN KR26 KR36	white	7887

Technical data

Voltage:	230 V AC 50 / 60 Hz
Dimensions:	359 x 163 x 90 mm
Lamp:	8 W Fluorescent lamp T16
Visibility range:	25
Operation mode:	Permanent operation, Wake up mode
Luminous flux / intensity:	8 W Fluorescent lamp T16 (inclusive) Luminous flux of light 270 lm
Degree / class of protection:	IP54 / Class II
Ambient temperature:	+5 °C to +35 °C
Housing:	Polycarbonate
Material color:	white
Battery	
Accu:	NiMH 3.6 V 4000 mAh
Nominal operation duration:	3 h
Monitoring	
Local surveillance:	Button for operation check

Product information

Illuminated exit sign / pictorial emergency sign with single battery

Sturdy plastic case IP54

Visibility range 25 m

Eco-friendly NiMH battery

Rated operating time 1 or 3 hours

Button for operation check (on the housing)

Lamp, battery and four pictograms included

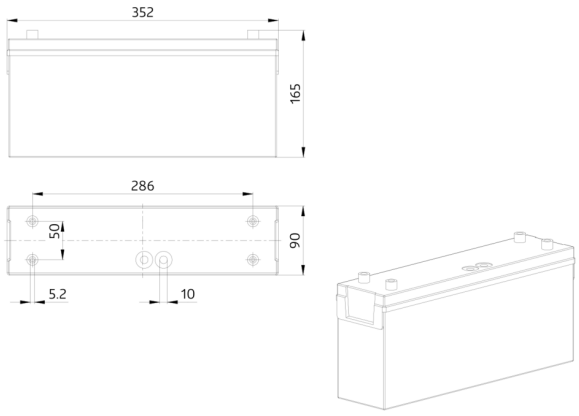
352
165
286
50
90
5.2
10

Accessories

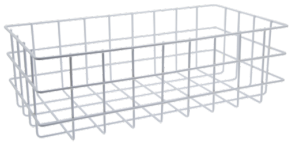

Wire basket BSK 2DN KR26 KR36
Art.No: 7887

Dimensions: 442 x 241 x 143 mm
Housing: coated steel basket
Material color: white