B.E.G. LUXOMAT®



10 x BL4-C-FC Set 93231-92199-93194

Remote control-capable ceiling motion detector designed for corridors

For mounting in suspended ceilings

One channel for light switching

Order data

Designation	Colour	Art.No
10 x BL4-C-FC	white	93231
Wire basket BSK (Ø 200 x 90 mm)	white	92199
Mounting set BL4-FM	white	93194

Technical data

Voltage:	110 – 240 V AC 50 / 60 Hz
Dimensions:	**Ø 200 x 90 mm (92199) + Ø 77 x 4.2 mm (93194)**
Power consumption:	approx. 0.3 W
Detection area:	horizontal 360° (Ceiling mounting)
Range:	max. Ø 32 m across max. Ø 16 m towards
Monitored area (tangential movement):	200 m² / 2.5 m mounting height
Mounting height min./max./recommended:	2.4 m / 2.6 m / 2.5 m
Degree / class of protection:	IP20 / Class II
Impact strength:	**IK09 (92199)**
Ambient temperature:	-25 °C to +50 °C
Housing:	**polycarbonate, UV-resistant + coated steel basket (92199)**
Material color:	white mat, similar to RAL9010
Connections and wires:	0.5 – 2.5 mm² for solid conductors
Channel 1 (lighting control)	
Switching power:	1000 W, cos φ = 1 500 VA, cos φ = 0.5 400 W LED
Type of contact (k):	1x µ-contact, NO contact
Follow-up time:	15 sec – 60 min
Switch-on threshold:	10 – 2000 Lux

Product information

Set : 10 x BL4-C-FC + Wire basket BSK (Ø 200 x 90 mm) white + Mounting set BL4-FM white

Remote control-capable ceiling motion detector designed for corridors

For mounting in suspended ceilings

One channel for light switching

Manual switching via push-button possible

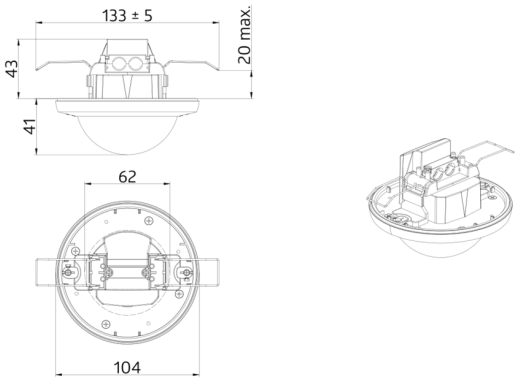
133 ± 5
20 max.
43
41
62
104

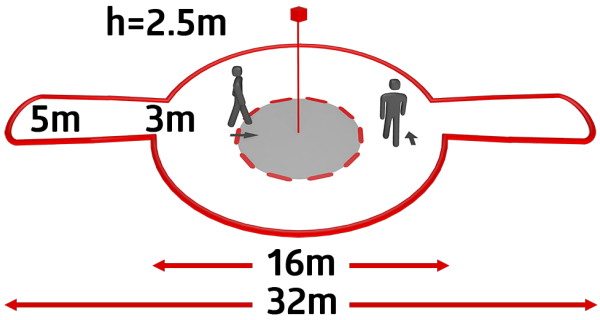
h=2.5m
5m
3m
16m
32m

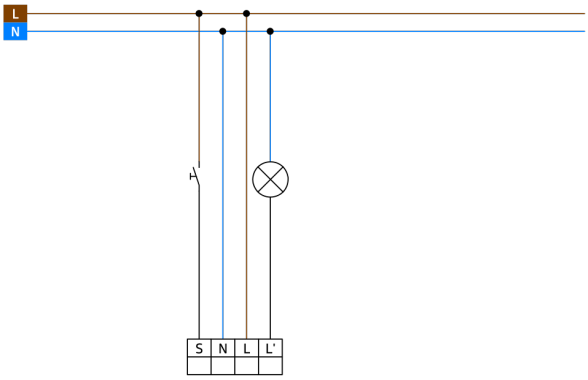
L
N
S
N
L
L'

Set items

To receive the bundle according to the technical specification, please order the items listed.



10 x BL4-C-FC
Art.No: 93231

Voltage: 110 – 240 V AC 50 / 60 Hz
Dimensions: Ø 104.5 x 84 mm
Power consumption: approx. 0.3 W

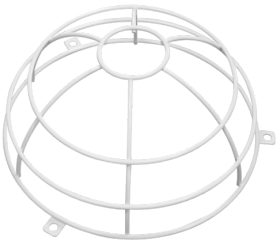

Wire basket BSK (Ø 200 x 90 mm)
Art.No: 92199

Dimensions: Ø 200 x 90 mm
Impact strength: IK09
Housing: coated steel basket

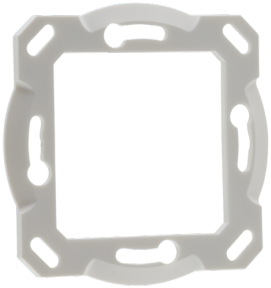

Mounting set BL4-FM
Art.No: 93194

Dimensions: Ø 77 x 4.2 mm
Material color: white