B.E.G. LUXOMAT®

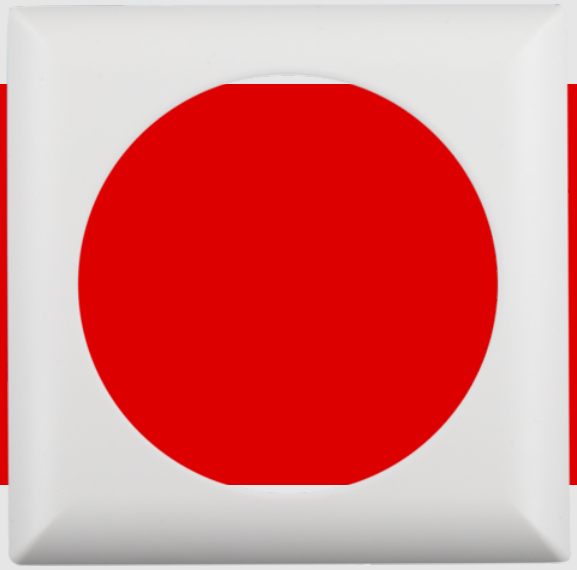

Square design frame PD4-FC

Prod.No. 92992 EAN: 4007529929924

Rectangular clip design frame for PD4 detectors

Easy mounting by simply clipping on

Order data

Designation	Colour	Art.No
Square design frame PD4-FC	pure white	92992

Technical data

Dimensions:	101 x 101 x 11.8 mm
Housing:	polycarbonate, UV-resistant
Material color:	pure white mat, similar to RAL9010

Product information

Rectangular clip design frame for PD4 detectors

Easy mounting by simply clipping on

Suitable for: PD4-M-1C-FC, PD4-M-2C-FC, PD4-M-DIM-HVAC-FC, PD4-S-FC, PD4-M-1C-C-FC, PD4-M-1C-C-PS-FC, PD4-M-2C-C-FC, PD4-S-C-FC, PD4N-LON-FC

Suitable for: 92143, 92254, 92255, 92444, 92480, 92585, 92586, ...

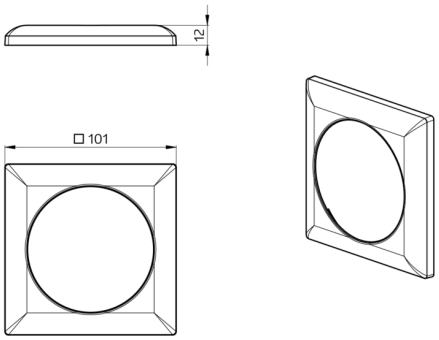
12
□ 101