B.E.G. LUXOMAT®



SM socle mounting set IP65 PD4N

Prod.No. 93314 EAN: 4007529933143

IP65 surface-mounting set for converting PD4N flush-mounted devices

For usability/compatibility of the accessories please refer to the descriptions of the main articles

Order data

Designation	Colour	Art.No
SM socle mounting set IP65 PD4N	white	93314

Technical data

Dimensions:	133 x 133 x 69 mm
Degree / class of protection:	IP65
Material color:	white

Product information

IP65 surface-mounting set for converting PD4N flush-mounted devices

For usability/compatibility of the accessories please refer to the descriptions of the main articles

Suitable for: 92151, 93241, 93340, 93377, 93460, 93461, 93463, 93473, 93474, 93514, 93515, 93517, 93535, 93536, 93546, ...

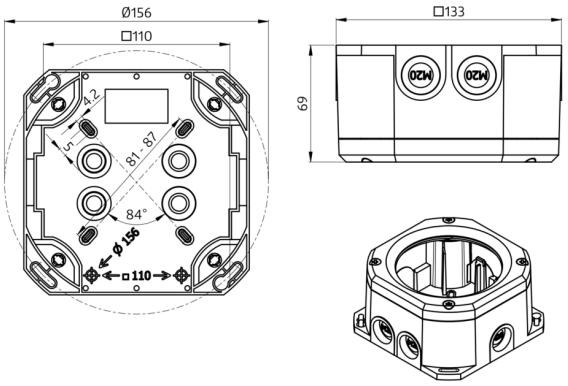
Ø156
□110
4.2
5
81 - 87
84°
Ø 156
□ 110
□133
69
M20
M20