B.E.G. LUXOMAT®



SM socle mounting set IP54 PD4N H

Prod.No. 93786 EAN: 4007529937868

Surface-mounting set for converting PD4N ceiling-mounted devices

For usability/compatibility of the accessories please refer to the descriptions of the main articles

Order data

Designation	Colour	Art.No
SM socle mounting set IP54 PD4N H	anthracite	93786

Technical data

Dimensions:	Ø 110 x 45 mm
Degree / class of protection:	IP54
Material color:	anthracite, similar to RAL7016

Product information

Surface-mounting set for converting PD4N ceiling-mounted devices

For usability/compatibility of the accessories please refer to the descriptions of the main articles

Suitable for: 93241, 93353, 93460, 93461, 93463, 93473, 93474, ...

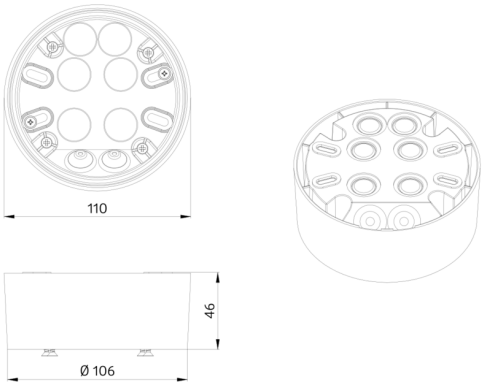
110
46
Ø 106