B.E.G. LUXOMAT®



PD4-M-TRIO-C-3P-FC

Prod.No. 92746 EAN: 4007529927463

230V PIR motion detector with 360° coverage and a detection area of up to 40x5m (250 m²), suitable for hallways, remote-controlled, and compatible with emergency power systems

Order data

Designation	Colour	Art.No
PD4-M-TRIO-C-3P-FC	white	92746

Areas of application

- corridors/hallways

Accessories

Designation	Colour	Art.No
BLE-IR-Adapter	black	93067
IR-PD-1C	-	92520
IR-PD-1C-E	-	92077
IR-PD-Mini	-	92159
Wire basket BSK (Ø 200 x 90 mm)	white	92199
Blinds PD4	transparent	92313

Technical data

Voltage:	110 – 240 V AC 50 / 60 Hz
Dimensions:	Ø 117 x 100 mm
Power consumption:	approx. 0.5 W
Detection area:	horizontal 360° (Ceiling mounting)
Range:	max. Ø 40 m across max. Ø 20 m towards
Monitored area (tangential movement):	250 m² / 2.5 m mounting height
Mounting height min./max./recommended:	2.4 m / 2.6 m / 2.5 m
Degree / class of protection:	IP20 / Class II
Impact strength:	IK04
Ambient temperature:	-25 °C to +50 °C
Housing:	polycarbonate, UV-resistant
Material color:	white mat, similar to RAL9010
Channel 1 (lighting control, potential-free (dry))	
Switching power:	2300 W, cos φ = 1 1150 VA, cos φ = 0.5 300 W LED
Type of contact (k):	2x µ-contact, dry Contact NC with tungsten pre-make contact
Follow-up time:	15 sec – 30 min, Pulse
Switch-on threshold:	10 – 2000 Lux
Light measuring:	Mixed light measuring

Product information

1-channel occupancy detector with two simultaneously operating relay outputs, which enable distribution to different phases

The switching channel with the two relay outputs closes when the operating voltage of the detector fails, so the lighting remains on as long as the two phases of the luminaires are supplied with power.

The device requires an operating voltage. The third phase can be used for this purpose.

Designed for corridors

Version as master device

Detection area can be extended by using slave devices

Manual switching via push-button possible

Additional functions can be set up using the optional remote control.

There are markings to ensure correct alignment during installation

Application examples:
corridors/hallways

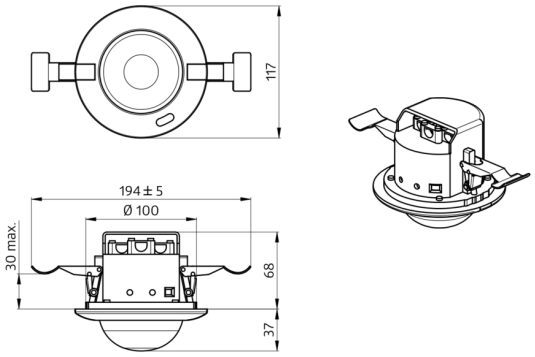

92746 PD4-M-TRIO-K-3P-DE

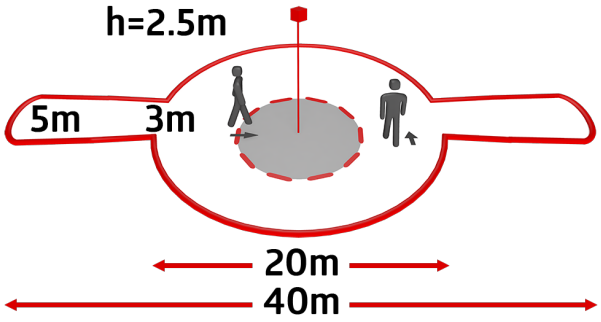

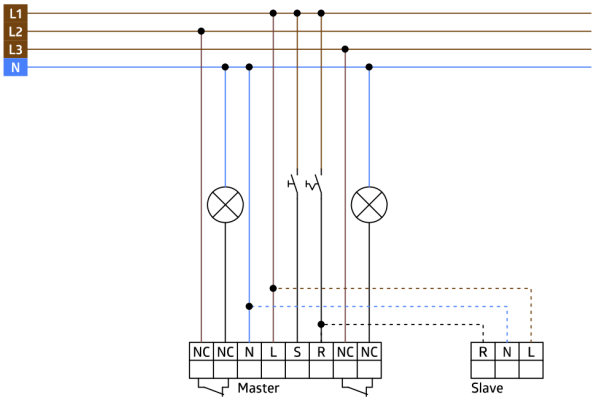

Accessories



BLE-IR-Adapter
Art.No: 93067

Dimensions: 40 x 55 x 103 mm
Material color: black
Frequency: 2.4 GHz ISM band, GFSK
0.2 dBm + 5.3 dBi = 5.5 dBm

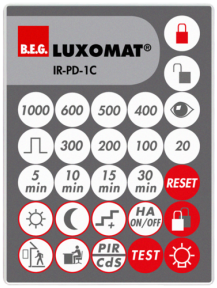

IR-PD-1C
Art.No: 92520

Battery: 3.0 V Lithium CR2032 (inclusive)
Dimensions: 80 x 60 x 8 mm
Material color: -

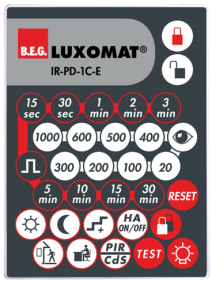

IR-PD-1C-E
Art.No: 92077

Battery: 3.0 V Lithium CR2032 (inclusive)
Dimensions: 80 x 60 x 8 mm
Material color: -



IR-PD-Mini
Art.No: 92159

Battery: 3.0 V Lithium CR2032 (inclusive)
Dimensions: 57 x 35 x 7 mm
Material color: -

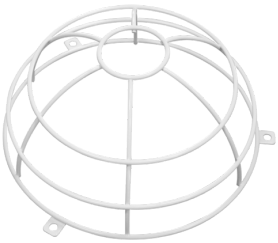

Wire basket BSK (Ø 200 x 90 mm)
Art.No: 92199

Dimensions: Ø 200 x 90 mm
Impact strength: IK09
Housing: coated steel basket



Blinds PD4
Art.No: 92313

Housing: Housing UV- and shockresistant Polycarbonate
Material color: transparent