B.E.G. LUXOMAT®




# PD4-M-1C-FC

Prod.No. 92585 EAN: 4007529925858

230V PIR motion detector with 360° detection and a range of up to Ø24m (450 m²), remote-controlled

## Order data

| Designation | Colour | Art.No |
|---|---|---|
| PD4-M-1C-FC | white | 92585 |

## Areas of application

- open-plan offices
- conference rooms
- classrooms/seminar rooms
- entrance halls
- corridors/hallways
- toilets
- equipment rooms
- small offices

## Accessories

| Designation | Colour | Art.No |
|---|---|---|
| RC-Arc extinction kit | white | 10880 |
| Mini-RC-Arc extinction kit | | 10882 |
| BLE-IR-Adapter | black | 93067 |
| IR-PD-1C | - | 92520 |
| IR-PD-1C-E | - | 92077 |
| IR-PD-Mini | - | 92159 |
| Wire basket BSK (Ø 200 x 90 mm) | white | 92199 |
| Square design frame PD4-FC | pure white | 92992 |
| Blinds PD4 | transparent | 92313 |

## Technical data

| | |
|---|---|
| Voltage: | 110 – 240 V AC 50 / 60 Hz |
| Dimensions: | Ø 97 x 103 mm |
| Power consumption: | approx. 0.4 W |
| Detection area: | horizontal 360° (Ceiling mounting) |
| Range: | max. Ø 24 m across<br>max. Ø 8 m towards<br>max. Ø 6.4 m seated |
| Monitored area (tangential movement): | 450 m² / 2.5 m mounting height |
| Mounting height min./max./recommended: | 2 m / 10 m / 2.5 m |
| Degree / class of protection: | IP20 / Class II |
| Impact strength: | IK04 |
| Ambient temperature: | -25 °C to +50 °C |
| Housing: | polycarbonate, UV-resistant |
| Material color: | white mat, similar to RAL9010 |
| **Channel 1 (lighting control, potential-free (dry))** | |
| Switching power: | 2300 W, cos φ = 1<br>1150 VA, cos φ = 0.5<br>800 W LED<br>max. inrush current Ip (20 ms) = 165 A<br>max. inrush current Ip (200 µs) = 800 A |
| Type of contact (k): | 1x µ-contact, dry NO contact with tungsten pre-make contact |
| Follow-up time: | 15 sec – 30 min, Pulse |
| Switch-on threshold: | 10 – 2000 Lux |
| Light measuring: | Mixed light measuring |

## Product information

Occupancy detector with extended detection area

One potential-free (dry) contact

Version as master device

Detection area can be extended by using slave devices

Manual switching via push-button possible

Additional functions can be set up using the optional remote control.

Factory settings 10 min and 500 lux

**Application examples:**
open-plan offices, conference rooms, classrooms/seminar rooms, entrance halls, corridors/hallways, toilets, equipment rooms, small offices

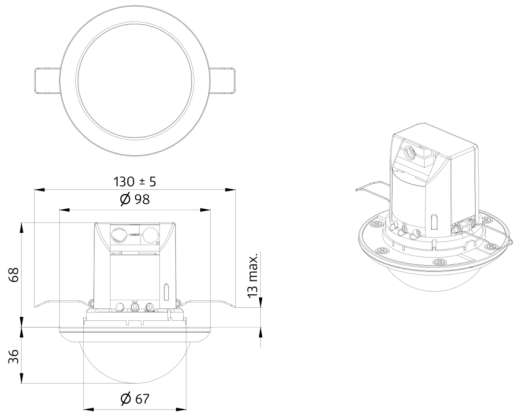
130 ± 5
Ø 98
68
13 max.
36
Ø 67

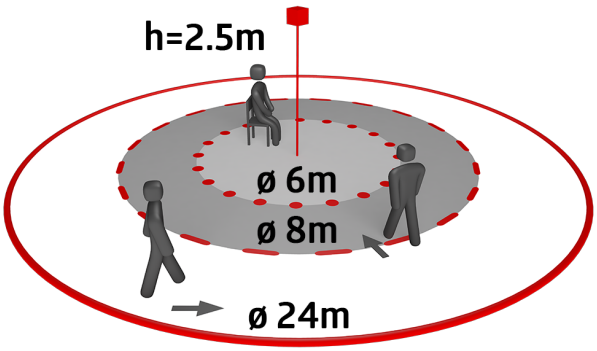
h=2.5m
ø 6m
ø 8m
ø 24m

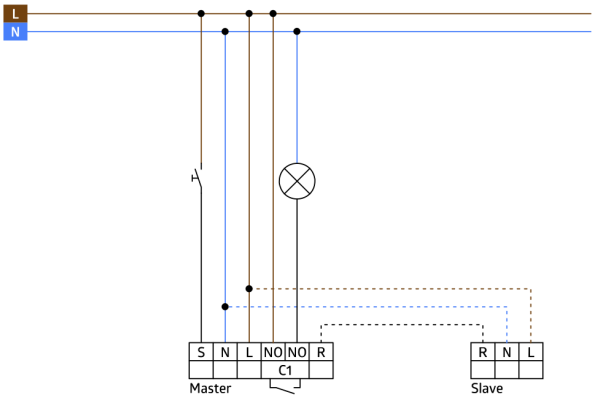
L
N
S
N
L
NO
NO
R
C1
Master
R
N
L
Slave

## Accessories



**RC-Arc extinction kit**
Art.No: 10880

Voltage: 230 V AC ±10%
Dimensions: 38 x 12 x 26 mm
Degree / class of protection: IP20 / Class II



**Mini-RC-Arc extinction kit**
Art.No: 10882

Voltage: 230 V AC ±10%
Dimensions: 50 x 23 x 8 mm
Degree / class of protection: IP20 / Class II



**BLE-IR-Adapter**
Art.No: 93067

Dimensions: 40 x 55 x 103 mm
Material color: black
Frequency: 2.4 GHz ISM band, GFSK
0.2 dBm + 5.3 dBi = 5.5 dBm

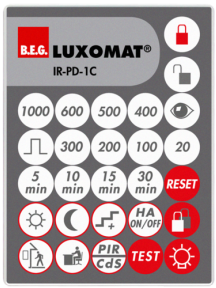


**IR-PD-1C**
Art.No: 92520

Battery: 3.0 V Lithium CR2032 (inclusive)
Dimensions: 80 x 60 x 8 mm
Material color: -

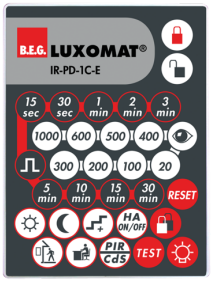


**IR-PD-1C-E**
Art.No: 92077

Battery: 3.0 V Lithium CR2032 (inclusive)
Dimensions: 80 x 60 x 8 mm
Material color: -



**IR-PD-Mini**
Art.No: 92159

Battery: 3.0 V Lithium CR2032 (inclusive)
Dimensions: 57 x 35 x 7 mm
Material color: -

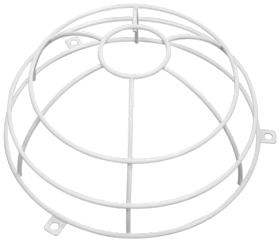

**Wire basket BSK (Ø 200 x 90 mm)**
Art.No: 92199

Dimensions: Ø 200 x 90 mm
Impact strength: IK09
Housing: coated steel basket



**Square design frame PD4-FC**
Art.No: 92992

Dimensions: 101 x 101 x 11.8 mm
Housing: polycarbonate, UV-resistant
Material color: pure white mat, similar to RAL9010



**Blinds PD4**
Art.No: 92313

Housing: Housing UV- and shockresistant Polycarbonate
Material color: transparent